# Olympus Block Diagram

Project code: 91.4Y601.001
PCB P/N : 48.4Y603.0SA
REVISION : 07258-1

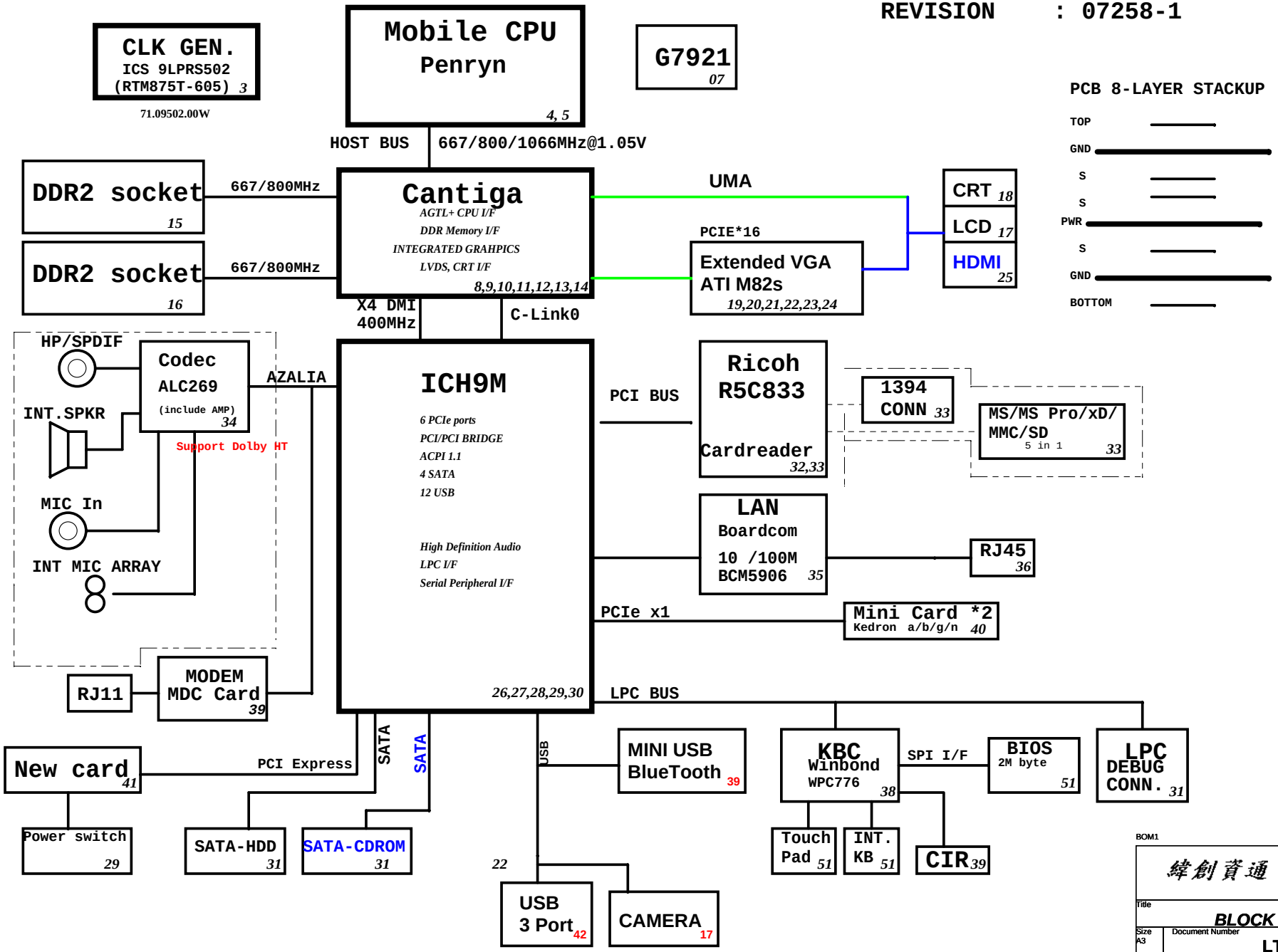


PCB 8-LAYER STACKUP

TOP
GND
S
S
PWR
S
GND
BOTTOM

| SYSTEM DC/DC ISL6236 38 | |
|---|---|
| INPUTS | OUTPUTS |
| DCBATOUT | 5V_S5(5A)<br>3D3V_S5(5A) |

| SYSTEM DC/DC TPS51124 40 | |
|---|---|
| INPUTS | OUTPUTS |
| DCBATOUT | 1D05V_M(11A)<br>1D5V_S3(10A) |

| TPS51117 39 | |
|---|---|
| DCBATOUT | 1D8V_S3<br>(2.5A) |

| TPS51100 39 | |
|---|---|
| 1D8V_S3 | DDR_VREF_S0<br>(1.5A)<br>DDR_VREF_S3 |

| APL5308 39 | |
|---|---|
| 3D3V_S0 | 2D5V_S0<br>(300mA) |

| CHARGER BQ24750 42 | |
|---|---|
| INPUTS | OUTPUTS |
| DCBATOUT | CHG_PWR<br>18V 4.0A<br>UP+5V<br>5V 100mA |

| CPU DC/DC ISL6266A 37 | |
|---|---|
| INPUTS | OUTPUTS |
| DCBATOUT | VCC_CORE_S0<br>0~1.3V 47A |

| NB DC/DC ISL6263A 41 | |
|---|---|
| INPUTS | OUTPUTS |
| DCBATOUT | GFX_CORE |

| SC411 48 | |
|---|---|
| DCBATOUT | 1D5V_S3 |

BOM1

緯創資通 Wistron Corporation
21F, 88, Sec.1, Hsin Tai Wu Rd., Hsichih,
Taipei Hsien 221, Taiwan, R.O.C.

Title: BLOCK DIAGRAM

Size: A3 | Document Number: LT32M | Rev: -1

Date: Tuesday, May 13, 2008 | Sheet 1 of 55

## ICH9M Functional Strap Definitions

ICH9 EDS 642879 Rev.1.5 page 92

| Signal | Usage/When Sampled | Comment |
|---|---|---|
| HDA_SDOUT | XOR Chain Entrance/ PCIE Port Config1 bit1, Rising Edge of PWROK | Allows entrance to XOR Chain testing when TP3 pulled low.When TP3 not pulled low at rising edge of PWROK,sets bit1 of RPC.PC(Config Registers: offset 224h). This signal has weak internal pull-down |
| HDA_SYNC | PCIE config1 bit0, Rising Edge of PWROK. | This signal has a weak internal pull-down. Sets bit0 of RPC.PC(Config Registers:Offset 224h) |
| GNT2#/ GPIO53 | PCIE config2 bit2, Rising Edge of PWROK. | This signal has a weak internal pull-up. Sets bit2 of RPC.PC2(Config Registers:Offset 0224h) |
| GPIO20 | Reserved | This signal should not be pulled high. |
| GNT1#/ GPIO51 | ESI Strap (Server Only) Rising Edge of PWROK | ESI compatible mode is for server platforms only. This signal should not be pulled low for desttop and mobile. |
| GNT3#/ GPIO55 | Top-Block Swap Override. Rising Edge of PWROK. | Sampled low:Top-Block Swap mode(inverts A16 for all cycles targeting FWH BIOS space). Note: Software will not be able to clear the Top-Swap bit until the system is rebooted without GNT3# being pulled down. |
| GNT0#: SPI_CS1#/ GPIO58 | Boot BIOS Destination Selection 0:1. Rising Edge of PWROK. | Controllable via Boot BIOS Destination bit (Config Registers:Offset 3410h:bit 11:10). GNT0# is MSB, 01-SPI, 10-PCI, 11-LPC. |
| SPI_MOSI | Integrated TPM Enable, Rising Edge of CLPWROK | Sample low: the Integrated TPM will be disabled. Sample high: the MCH TPM enable strap is sampled low and the TPM Disable bit is clear, the Integrated TPM will be enable. |
| GPIO49 | DMI Termination Voltage, Rising Edge of PWROK. | The signal is required to be low for desktop applications and required to be high for mobile applications. |
| SATALED# | PCI Express Lane Reversal. Rising Edge of PWROK. | Signal has weak internal pull-up. Sets bit 27 of MPC.LR(Device 28:Function 0:Offset D8) |
| SPKR | No Reboot. Rising Edge of PWROK. | If sampled high, the system is strapped to the "No Reboot" mode(ICH9 will disable the TCO Timer system reboot feature). The status is readable via the NO REBOOT bit. |
| TP3 | XOR Chain Entrance. Rising Edge of PWROK. | This signal should not be pull low unless using XOR Chain testing. |
| GPIO33/ HDA_DOCK _EN# | Flash Descriptor Security Override Strap Rising Edge of PWROK | Sampled low:the Flash Descriptor Security will be overridden. If high,the security measures will be in effect.This should only be enabled in manufacturing environments using an external pull-up resister. |

## ICH9M Integrated Pull-up and Pull-down Resistors

ICH9 EDS 642879 Rev.1.5

| SIGNAL | Resistor Type/Value |
|---|---|
| CL_CLK[1:0] | PULL-UP 20K |
| CL_DATA[1:0] | PULL-UP 20K |
| CL_RST0# | PULL-UP 20K |
| DPRSLPVR/GPIO16 | PULL-DOWN 20K |
| ENERGY_DETECT | PULL-UP 20K |
| HDA_BIT_CLK | PULL-DOWN 20K |
| HDA_DOCK_EN#/GPIO33 | PULL-UP 20K |
| HDA_RST# | PULL-DOWN 20K |
| HDA_SDIN[3:0] | PULL-DOWN 20K |
| HDA_SDOUT | PULL-DOWN 20K |
| HDA_SYNC | PULL-DOWN 20K |
| GLAN_DOCK# | The pull-up or pull-down active when configured for native GLAN_DOCK# functionality and determined by LAN controller |
| GNT[3:0]#/GPIO[55,53,51] | PULL-UP 20K |
| GPIO[20] | PULL-DOWN 20K |
| GPIO[49] | PULL-UP 20K |
| LDA[3:0]#/FHW[3:0]# | PULL-UP 20K |
| LAN_RXD[2:0] | PULL-UP 20K |
| LDRQ[0] | PULL-UP 20K |
| LDRQ[1]/GPIO23 | PULL-UP 20K |
| PME# | PULL-UP 20K |
| PWRBTN# | PULL-UP 20K |
| SATALED# | PULL-UP 15K |
| SPI_CS1#/GPIO58/CLGPIO6 | PULL-UP 20K |
| SPI_MOSI | PULL-DOWN 20K |
| SPI_MISO | PULL-UP 20K |
| SPKR | PULL-DOWN 20K |
| TACH_[3:0] | PULL-UP 20K |
| TP[3] | PULL-UP 20K |
| USB[11:0][P,N] | PULL-DOWN 15K |

## Cantiga chipset and ICH9M I/O controller Hub strapping configuration

Montevina Platform Design guide 22339 0.5 page 218

| Pin Name | Strap Description | Configuration |
|---|---|---|
| CFG[2:0] | FSB Frequency Select | 000 = FSB1067<br>011 = FSB667<br>010 = FSB800<br>others = Reserved |
| CFG[4:3]<br>CFG8<br>CFG[15:14]<br>CFG[18:17] | Reserved | |
| CFG5 | DMI x2 Select | 0 = DMI x2<br>1 = DMI x4 (Default) |
| CFG6 | iTPM Host Interface | 0= The iTPM Host Interface is enabled(Note2)<br>**1=The iTPM Host Interface is disalbed(default)** |
| CFG7 | Intel Management engine Crypto strap | 0 = Transport Layer Security (TLS) cipher suite with no confidentiality<br>**1 = TLS cipher suite with confidentiality (default)** |
| CFG9 | PCIE Graphics Lane | 0 = Reverse Lanes,15->0,14->1 ect..<br>**1= Normal operation(Default):Lane Numbered in order** |
| CFG10 | PCIE Loopback enable | 0 = Enable (Note 3)<br>**1= Disabled (default)** |
| CFG[13:12] | XOR/ALL | 00 = Reserve<br>10 = XOR mode Enabled<br>01 = ALLZ mode Enabled (Note 3)<br>**11 = Disabled (default)** |
| CFG16 | FSB Dynamic ODT | 0 = Dynamic ODT Disabled<br>**1 = Dynamic ODT Enabled (Default)** |
| CFG19 | DMI Lane Reversal | **0 = Normal operation(Default): Lane Numbered in Order**<br>1 = Reverse Lanes<br>DMI x4 mode[MCH -> ICH]:(3->0,2->1,1->2and0->3)<br>DMI x2 mode[MCH -> ICH]:(3->0,2->1) |
| CFG20 | Digital Display Port (SDVO/DP/iHDMI) Concurrent with PCIe | **0 = Only Digital Display Port or PCIE is operational (Default)**<br>1 =Digital display port and PCIE are operting simulataneously via the PEG port |
| SDVO_CTRLDATA | SDVO Present | **0 =No SDVO Card Present (Default)**<br>1 = SDVO Card Present |
| L_DDC_DATA | Local Flat Panel (LFP) Present | **0 = LFP Disabled (Default)**<br>1= LFP Card Present; PCIE disabled |

**NOTE:**
1. All strap signals are sampled with respect to the leading edge of the (G)MCH Power OK (PWROK) signal.
2. iTPM can be disabled by a 'Soft-Strap' option in the Flash-decriptor section of the Firmware. This 'Soft-Strap' is activated only after enabling iTPM via CFG6.
Only one of the CFG10/CFG/12/CFG13 straps can be enabled at any time.

## SMBus

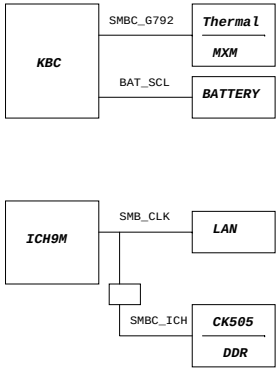


## PCI Routing

page 17

| | IDSEL | INT | REQ | GNT |
|---|---|---|---|---|
| TI7412 | AD22 | G:CARDBUS<br>B:1394<br>F:Flash Media<br>G:SD Host | 0 | 0 |

## PCIE Routing

| | |
|---|---|
| LANE2 | MiniCard WLAN |
| LANE3 | NewCard WLAN |

## USB Table

| USB | |
|---|---|
| Pair | Device |
| 0 | Combo(ESATA/USB) |
| 1 | NC |
| 2 | USB2 |
| 3 | USB4 |
| 4 | USB3 |
| 5 | BLUETOOTH |
| 6 | WEBCAM |
| 7 | FT |
| 8 | MINICARD |
| 9 | NEW1 |

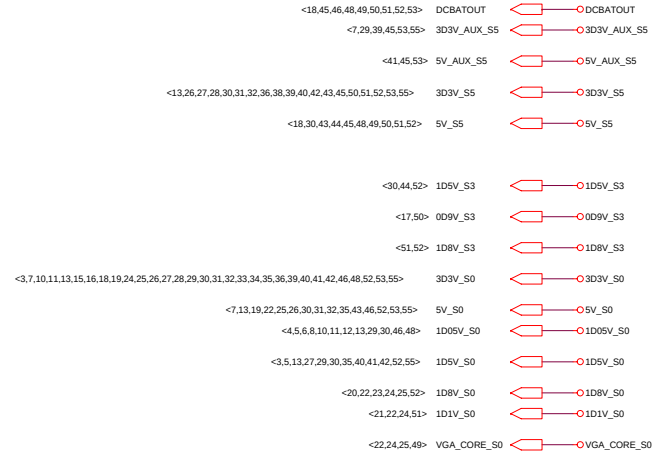


BOM1


緯創資通 Wistron Corporation
21F, 88, Sec.1, Hsin Tai Wu Rd., Hsichih, Taipei Hsien 221, Taiwan, R.O.C.


Title: Reference

Size: C | Document Number: LT32M | Rev: -1

Date: Tuesday, May 13, 2008 | Sheet 2 of 54

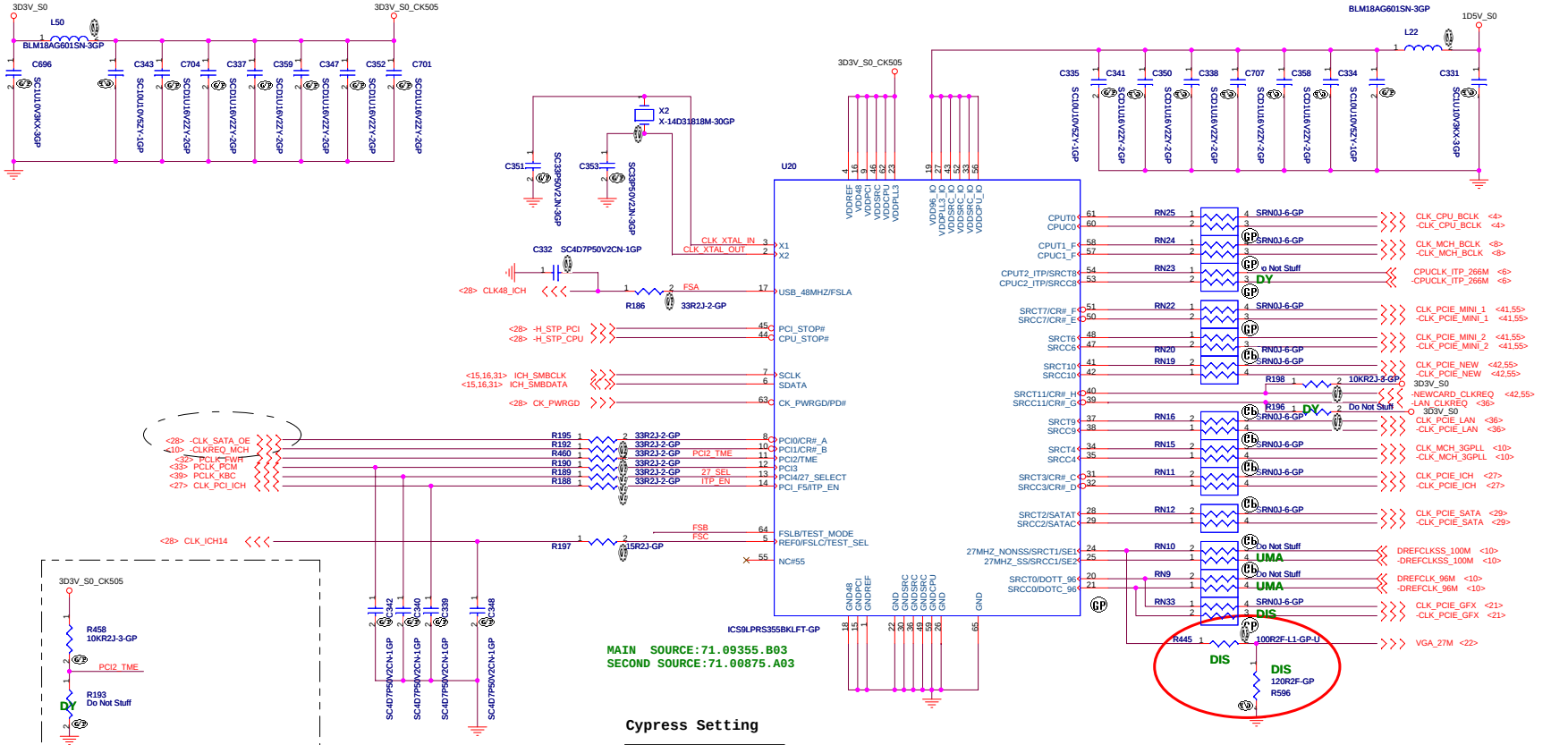


## Cypress Setting

| FS_C | FS_B | FS_A | CPU |
|---|---|---|---|
| 1 | 0 | 1 | 100M |
| 0 | 0 | 1 | 133M |
| 0 | 1 | 0 | 200M |
| 0 | 1 | 1 | 166M |
| 0 | 0 | 0 | 266M |

default

| ITP_EN | Output |
|---|---|
| 0 | SRC8 |
| 1 | CPU_ITP |

UMA =0
DIS =1

| 27_SEL | PIN 20 | PIN 21 | PIN 24 | PIN 25 |
|---|---|---|---|---|
| 0 | DOT96T | DOT96C | SRCT1/LCDT_100 | SRCT1/LCDT_100 |
| 1 | SRCT0 | SRCC0 | 27M_NSS | 27M_SS |

**Design Note:**

1. All of Input pin didn't have internal pull up resistor.
2. Clock Request (CR) function are enable by registers.
3. CY28548 integrated serial resistor of differential clock, so put 0 ohm serial resistor in the schematic.

BOM1

**Wistron Corporation**
21F, 88, Sec.1, Hsin Tai Wu Rd., Hsichih, Taipei Hsien 221, Taiwan, R.O.C.

Title: *Clock Generator*

Size | Document Number: **LT32M** | Rev: -1

Date: Tuesday, May 13, 2008 | Sheet 3 of 54

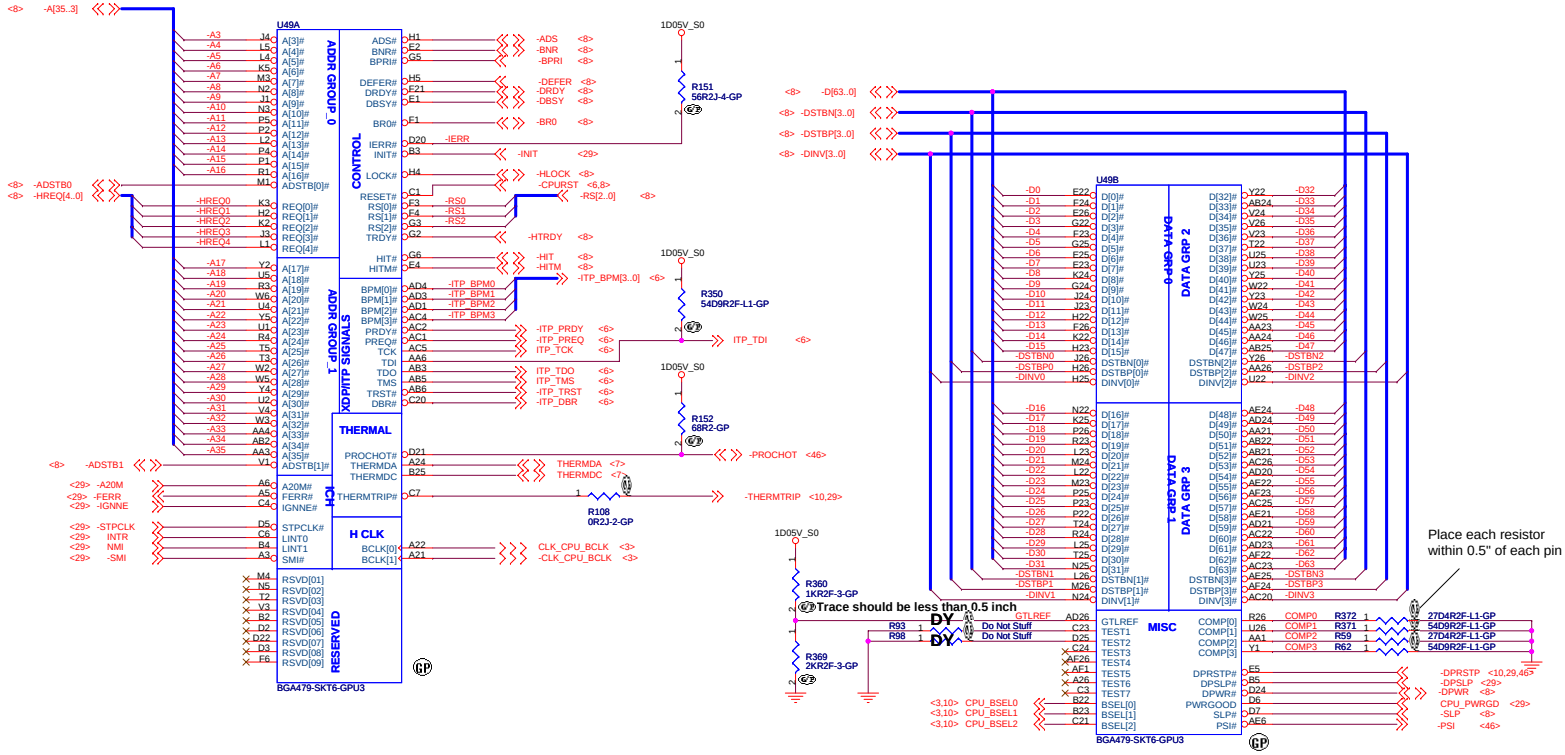


BOM1

**Wistron Corporation**
21F, 88, Sec.1, Hsin Tai Wu Rd., Hsichih,
Taipei Hsien 221, Taiwan, R.O.C.

Title: *Penryn CPU(1/2)*

Size: C | Document Number: LT32M | Rev: -1

Date: Tuesday, May 13, 2008 | Sheet 4 of 54

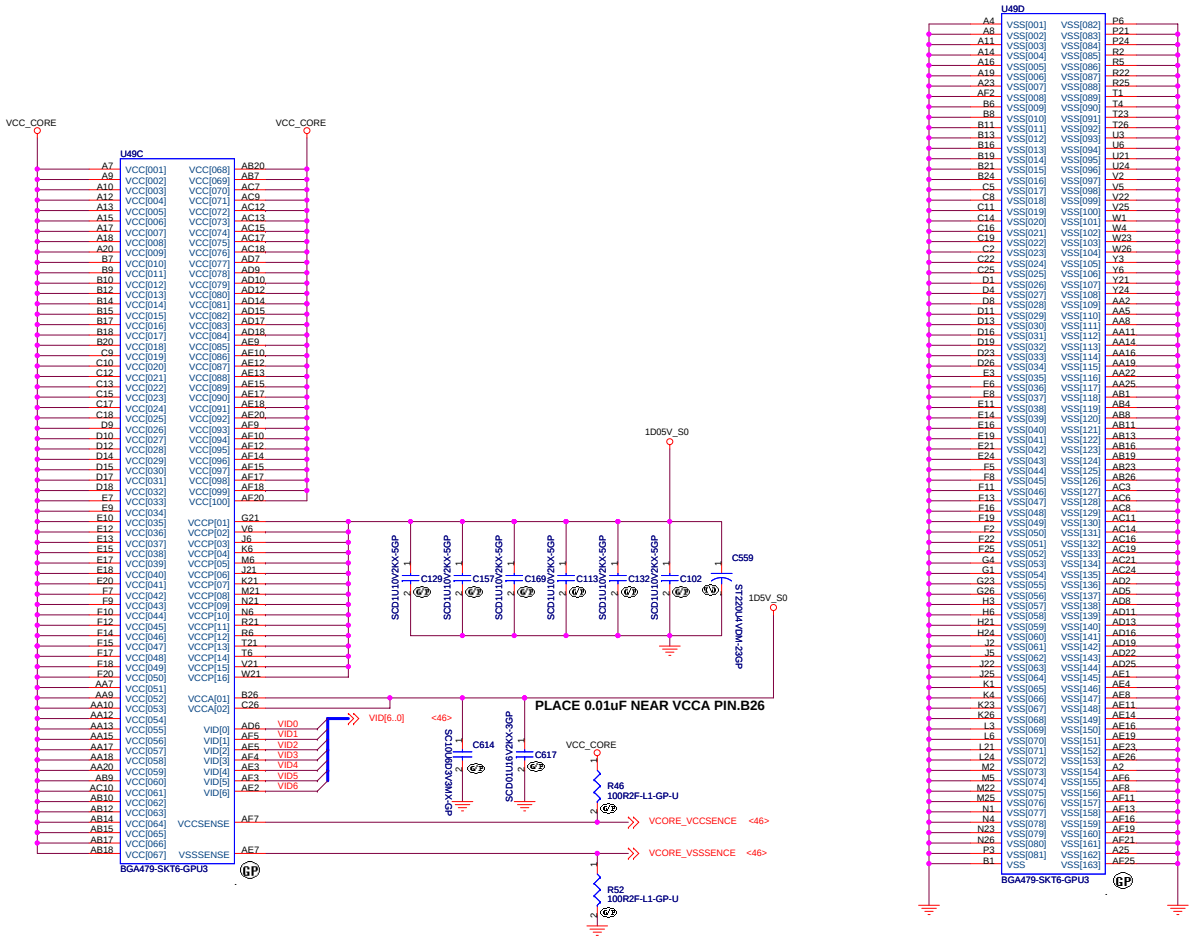


BOM1

| | |
|---|---|
| 緯創資通 | **Wistron Corporation** 21F, 88, Sec.1, Hsin Tai Wu Rd., Hsichih, Taipei Hsien 221, Taiwan, R.O.C. |
| Title | ***Penryn CPU(2/2)*** |
| Size C / Document Number | **LT32M** / Rev **-1** |
| Date: Tuesday, May 13, 2008 | Sheet 5 of 54 |

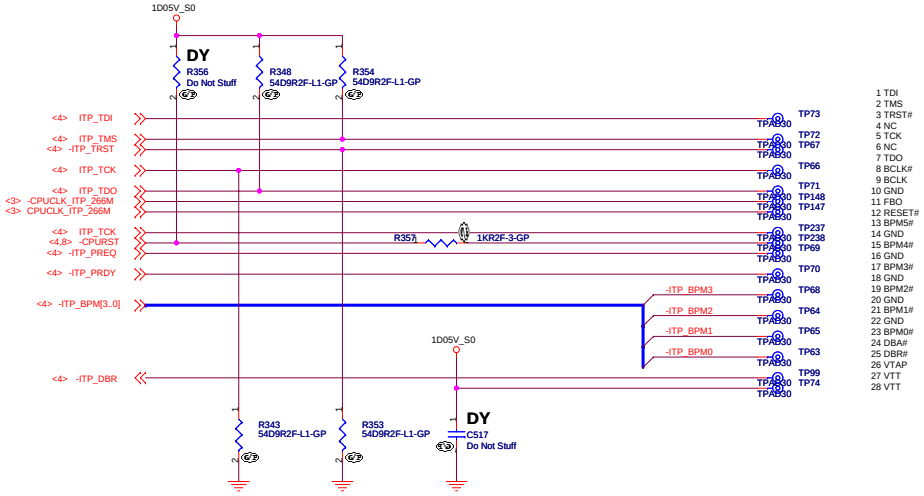


**(*1) TCK SIGNAL IS BRANCHED AT CPU's PIN**

**(*2) CPURST# SIGNAL IS BRANCHED AT GMCH's PIN**

| Ref Des | For ITP-XDP |
|---|---|
| J1 | NO_ASM-->ASM |
| C157 | NO_ASM-->ASM |
| R140 | NO_ASM-->1K 5% ASM |
| R144 | ASM (No Change) |
| R136 | ASM-->NO_ASM |
| R145 | ASM (No Change) |
| R141 | ASM-->54.9 1% ASM |
| R143 | ASM-->54.9 1% ASM |

BOM1

緯創資通 **Wistron Corporation**
21F, 88, Sec.1, Hsin Tai Wu Rd., Hsichih,
Taipei Hsien 221, Taiwan, R.O.C.

Title: ***ITP CONN***

Size: C | Document Number: **LT32M** | Rev: **-1**

Date: Tuesday, May 13, 2008 | Sheet 6 of 54

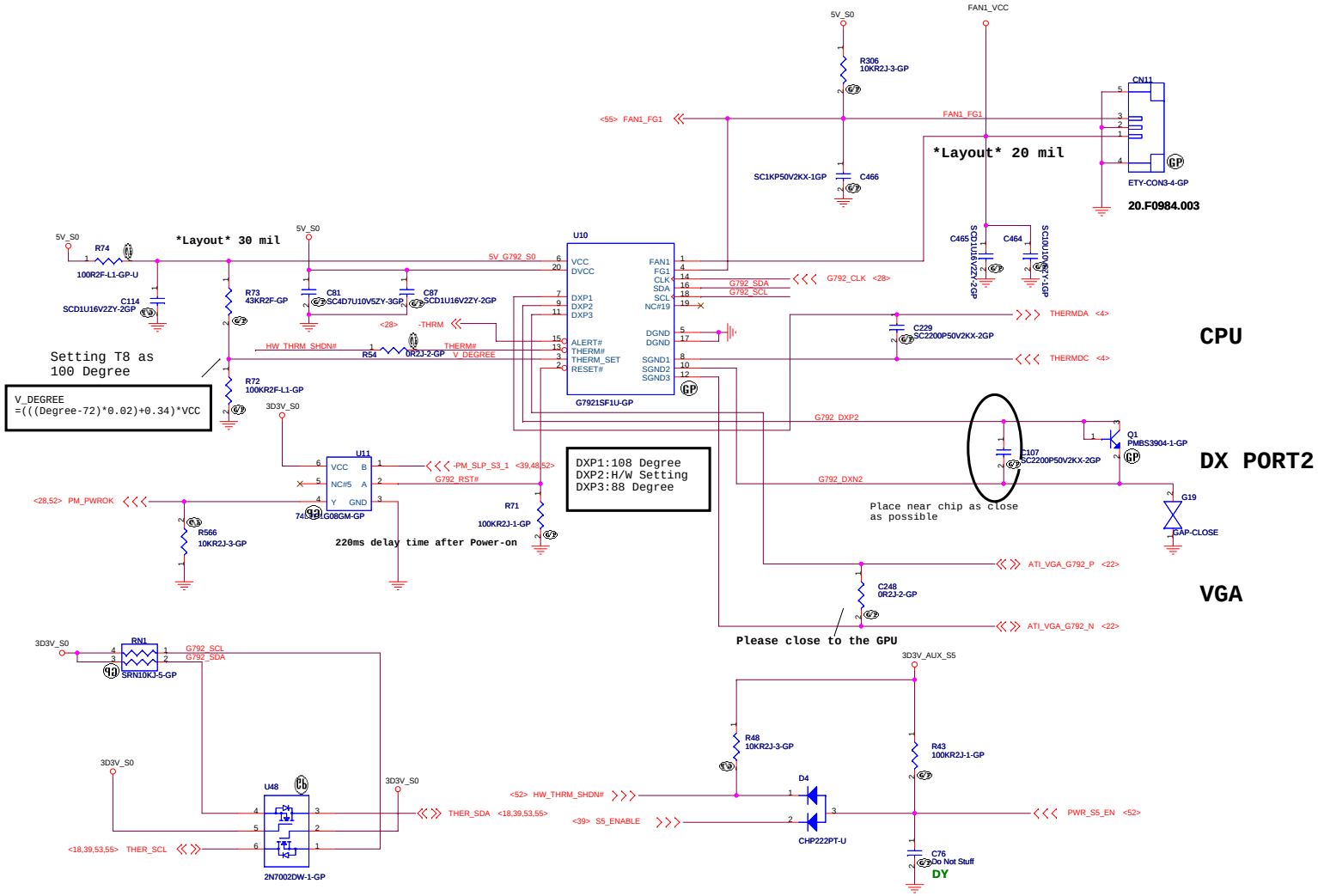


BOM1

| | | |
|---|---|---|
| 緯創資通 | **Wistron Corporation**<br>21F, 88, Sec.1, Hsin Tai Wu Rd., Hsichih,<br>Taipei Hsien 221, Taiwan, R.O.C. | |
| Title | ***Thermal/Fan Controllor G792*** | |
| Size C | Document Number **LT32M** | Rev **-1** |
| Date: Tuesday, May 13, 2008 | Sheet 7 of 54 | |

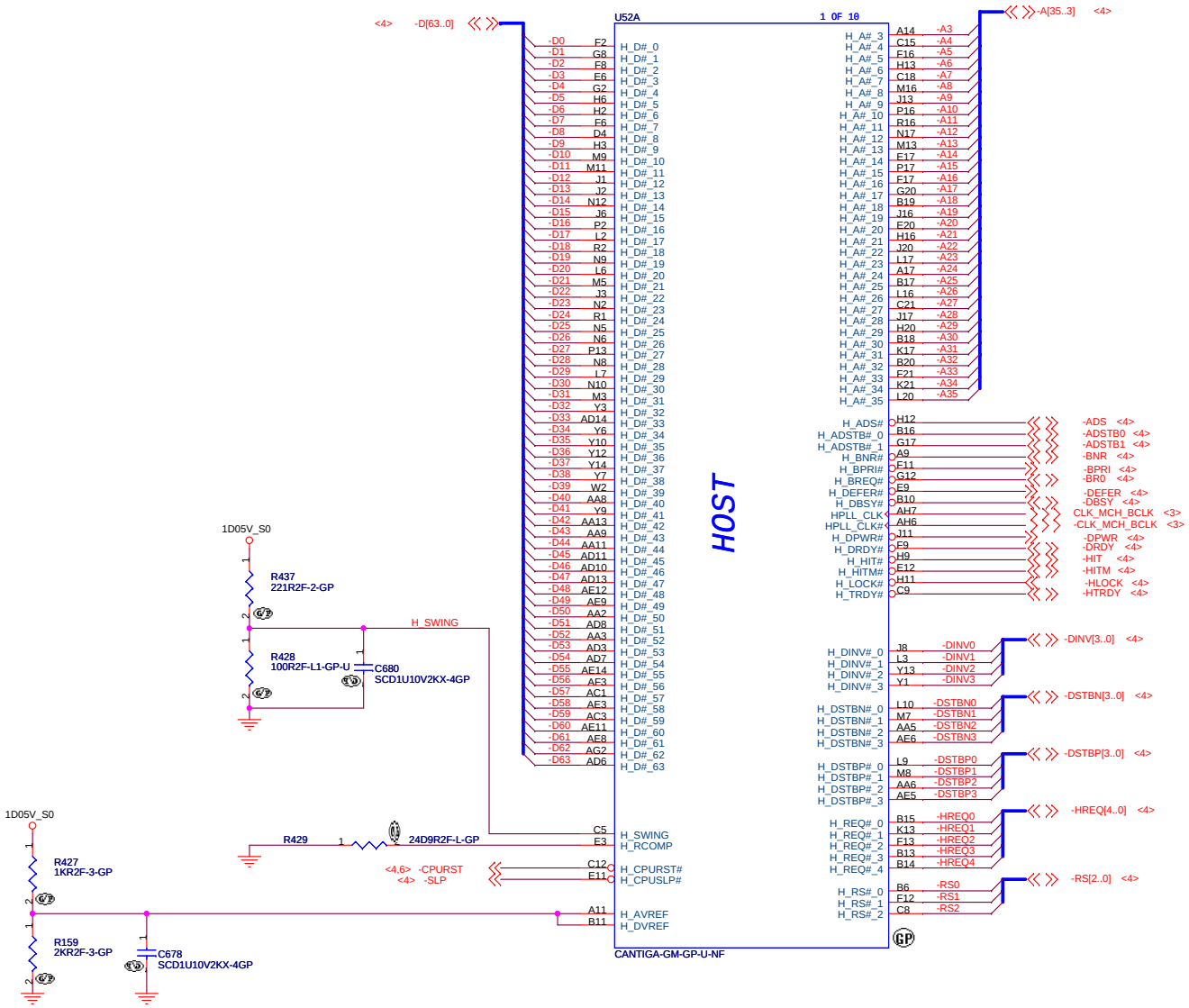


*Route H_XSWING & H_YSWING 10 mil wide / 20 mil spacing*

*Route H_XRCOMP & H_YRCOMP 10 mil wide / 20 mil spacing*

BOM1

緯創資通 **Wistron Corporation**
21F, 88, Sec.1, Hsin Tai Wu Rd., Hsichih, Taipei Hsien 221, Taiwan, R.O.C.

Title: **Cantiga(1/7):HOST I/F**

| Size | Document Number | Rev |
|---|---|---|
| A3 | LT32M | -1 |

Date: Tuesday, May 13, 2008 Sheet 8 of 54

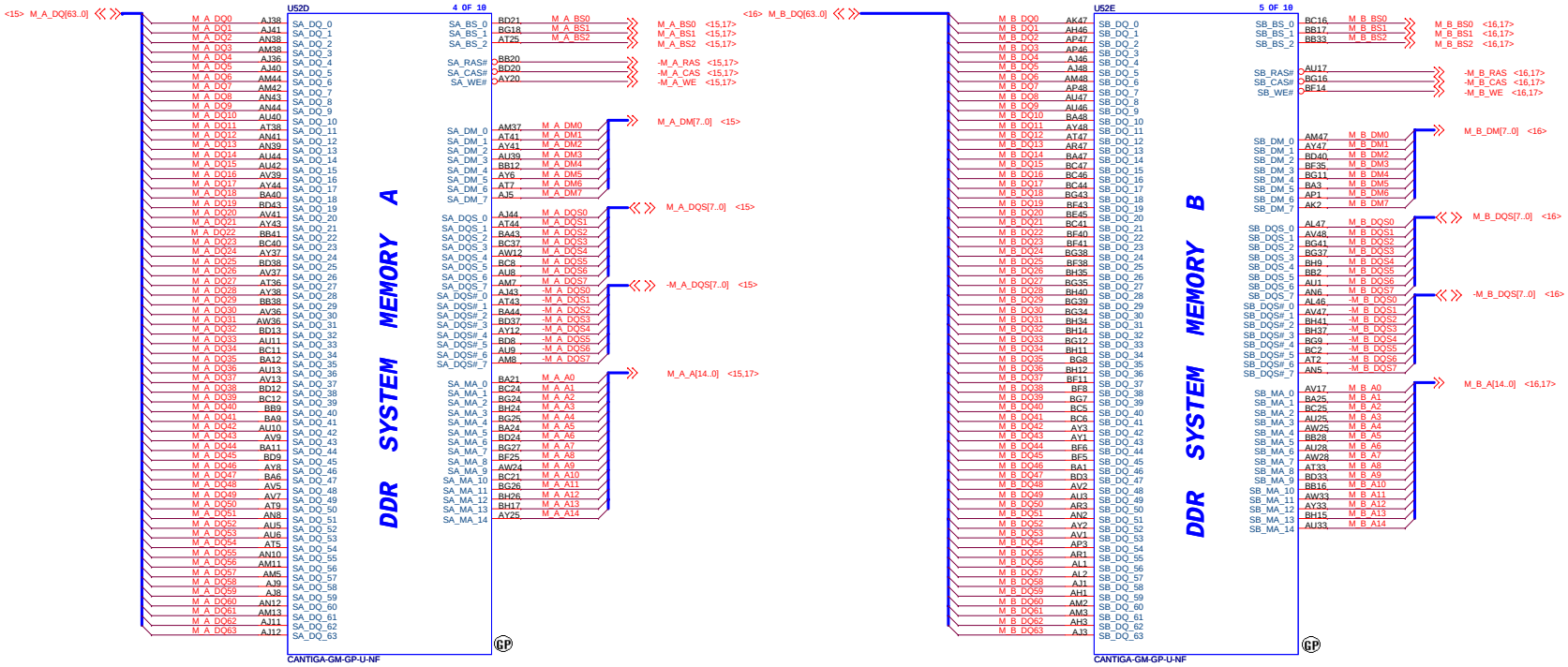


BOM1

緯創資通 **Wistron Corporation**
21F, 88, Sec.1, Hsin Tai Wu Rd., Hsichih,
Taipei Hsien 221, Taiwan, R.O.C.

Title: ***Cantiga(2/7):DDR3***

| Size | Document Number | Rev |
|---|---|---|
| C | LT32M | -1 |

Date: Tuesday, May 13, 2008 Sheet 9 of 54

ME DEBUG PORT PIN OUT TABLE

| | |
|---|---|
| RESERVED#AL34 | ME_JTAG_TCK |
| RESERVED#AK34 | ME_JTAG_TDI |
| RESERVED#AN35 | ME_JTAG_TDO |
| RESERVED#AM35 | ME_JTAG_TMS |

**CFG5 : DMIx2**
**CFG6 : iTPM**
**CFG7 : ME Crypto**
**CFG9: PCIE STD& REV**
**CFG16 : FSB Dynamic ODT**
**CFG19 : DMI Lane reversal**
**CFG20 : DP concurrent**
**CFG[17:3]:internal pullup**
**CFG[20:18]:internal pulldown**

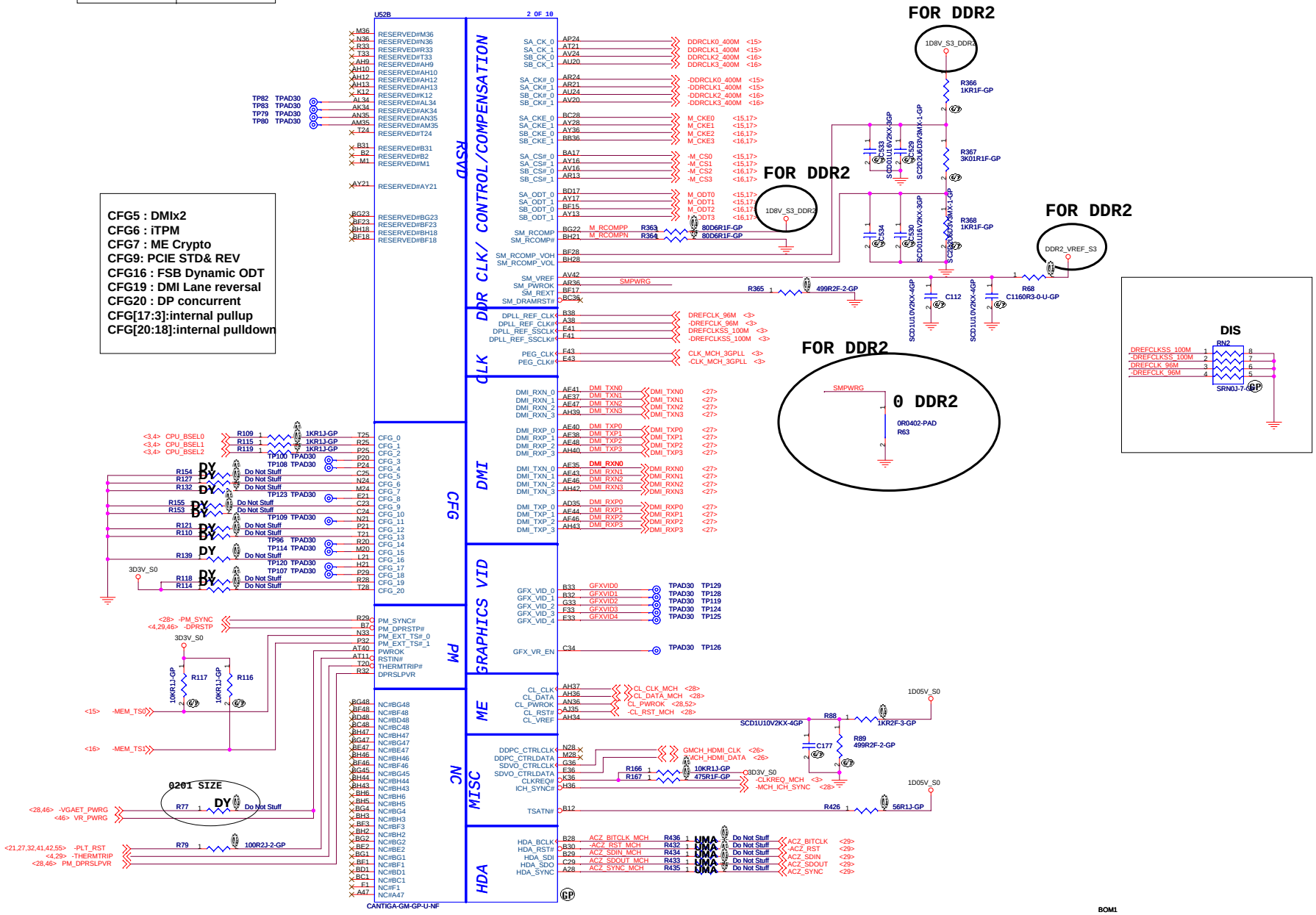


BOM1

**Wistron Corporation**
21F, 88, Sec.1, Hsin Tai Wu Rd., Hsichih,
Taipei Hsien 221, Taiwan, R.O.C.

Title: ***Cantiga(3/7):DMI/PM/CFG/GF***

| Size | Document Number | Rev |
|---|---|---|
| C | LT32M | -1 |

Date: Tuesday, May 13, 2008 Sheet 10 of 54

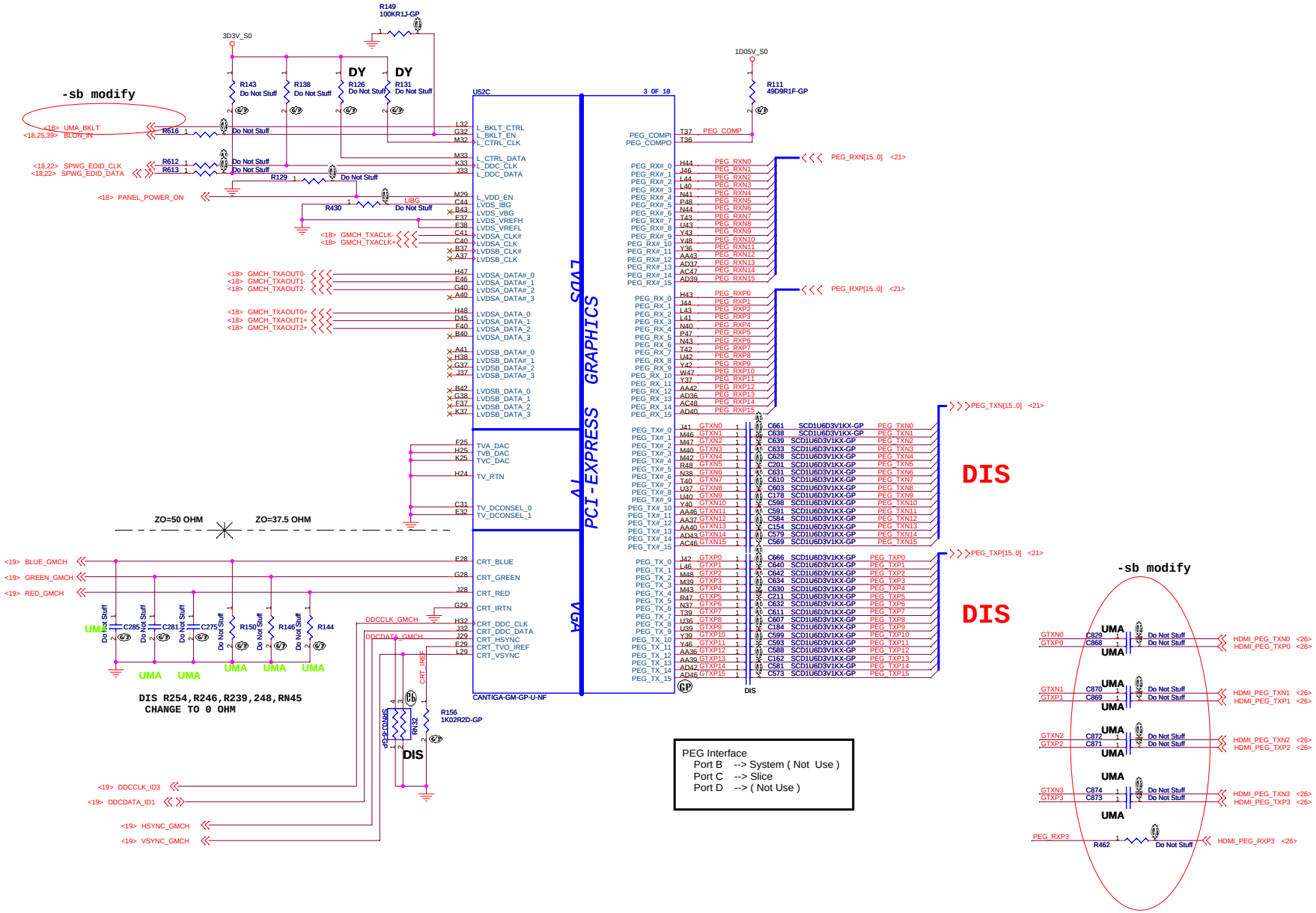


BOM1

**Wistron Corporation**
21F, 88, Sec.1, Hsin Tai Wu Rd., Hsichih,
Taipei Hsien 221, Taiwan, R.O.C.

Title: **CANTIGA(5/7)-VGA/LVDS**

| Size | Document Number | Rev |
|---|---|---|
| C | LT32M | -1 |

Date: Tuesday, May 13, 2008 Sheet 11 of 54

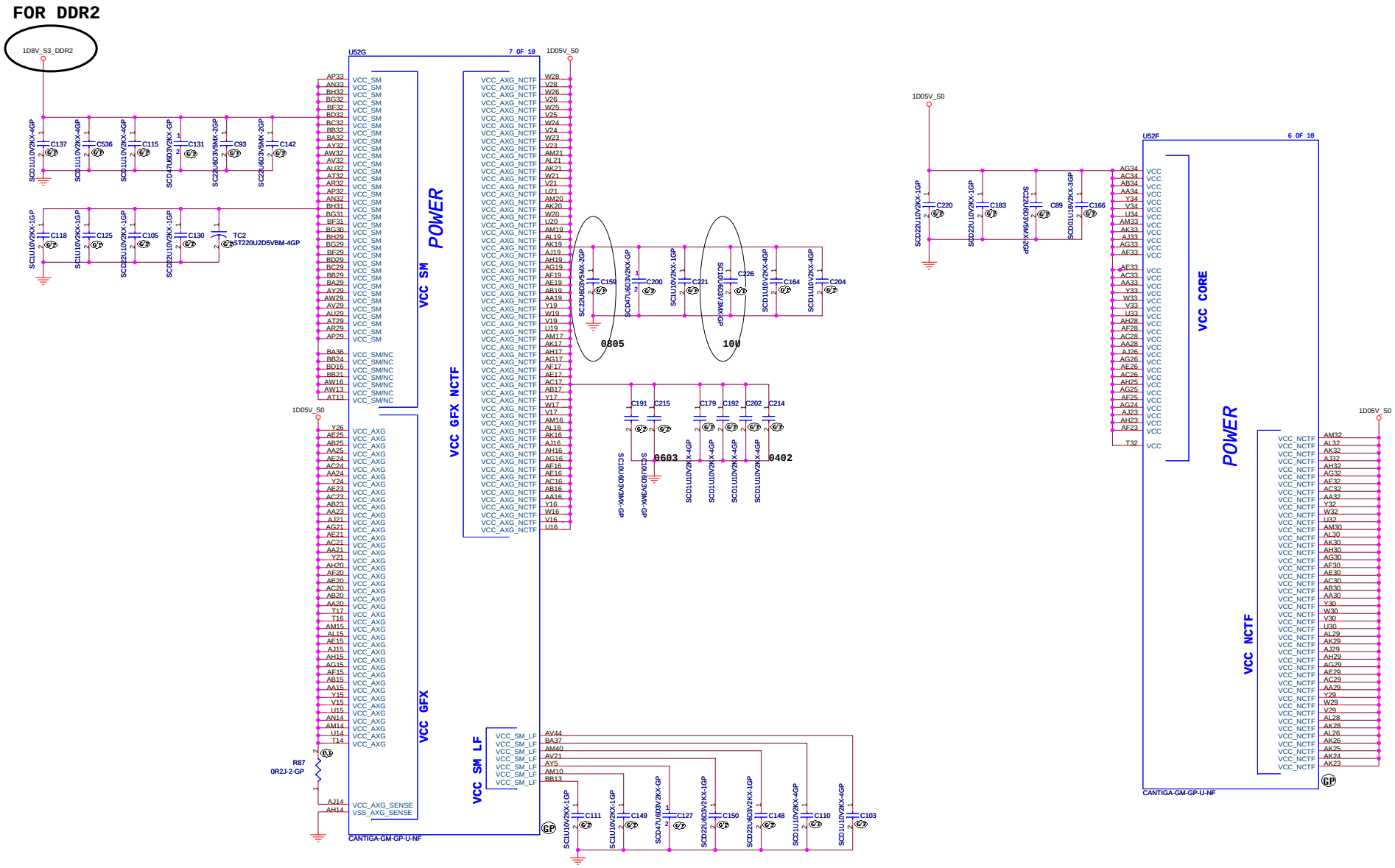


BOM1

**Wistron Corporation**
21F, 88, Sec.1, Hsin Tai Wu Rd., Hsichih,
Taipei Hsien 221, Taiwan, R.O.C.

Title: *Cantiga(5/7):VCC*

| Size | Document Number | Rev |
|---|---|---|
| C | LT32M | -1 |

Date: Tuesday, May 13, 2008 Sheet 12 of 54

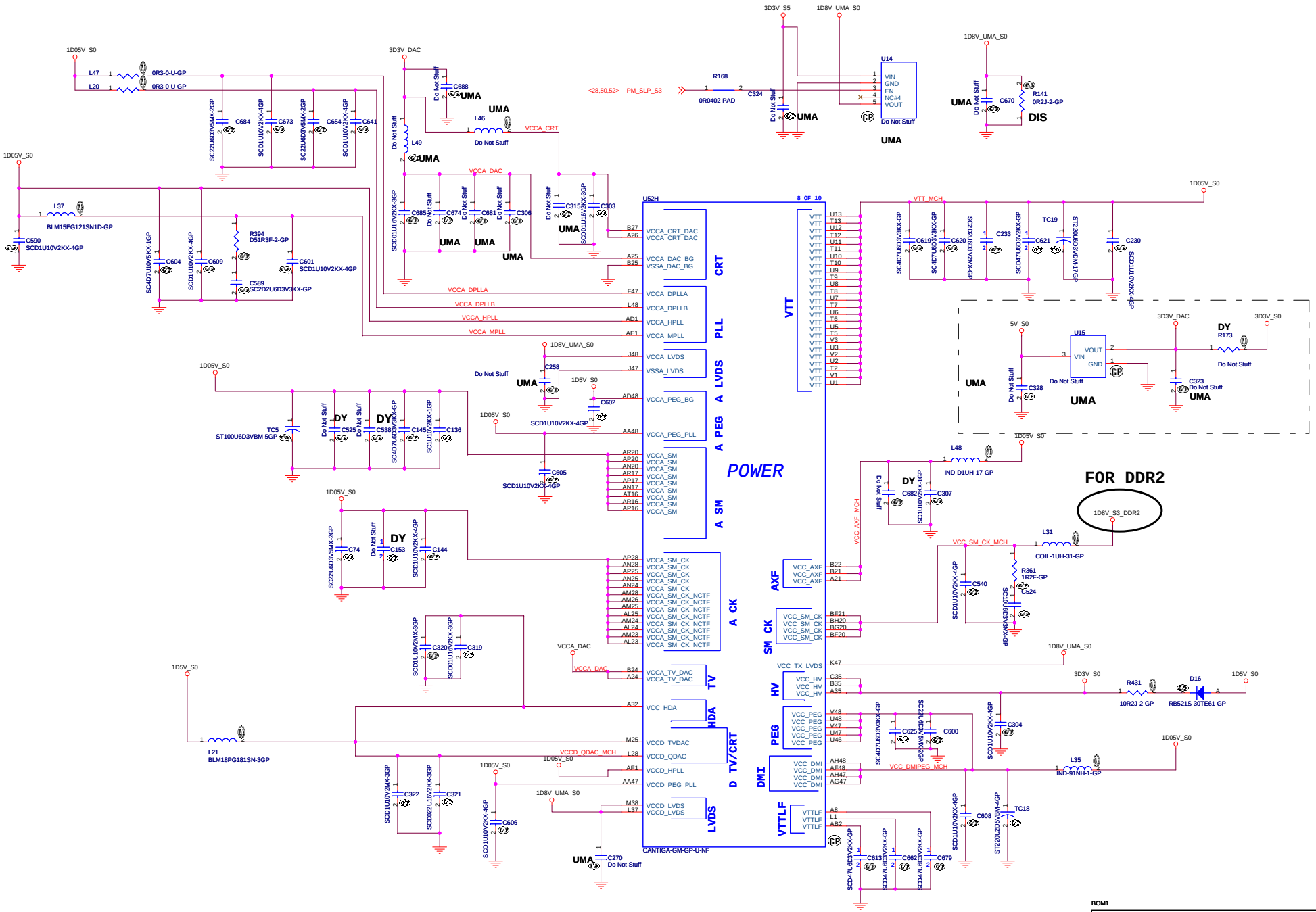
U52H
8 OF 10
POWER
CRT
PLL
A LVDS
A PEG
A SM
A CK
TV
HDA
D TV/CRT
LVDS
VTT
AXF
SM CK
HV
PEG
DMI
VTTLF
CANTIGA-GM-GP-U-NF
FOR DDR2
1D8V_S3_DDR2
U14
U15
R168
0R0402-PAD
<28,50,52> -PM_SLP_S3
3D3V_S5
1D8V_UMA_S0
1D05V_S0
3D3V_DAC
VCCA_CRT
VCCA_DAC
VCCA_DPLLA
VCCA_DPLLB
VCCA_HPLL
VCCA_MPLL
VTT_MCH
VCC_AXF_MCH
VCC_SM_CK_MCH
VCC_DMIPEG_MCH
VCCD_QDAC_MCH
VCC_TX_LVDS
L21
BLM18PG181SN-3GP
L37
BLM15EG121SN1D-GP
L31
COIL-1UH-31-GP
L35
IND-91NH-1-GP
L48
IND-D1UH-17-GP
D16
RB521S-30TE61-GP
R431
10R2J-2-GP
R141
0R2J-2-GP
R173
R361
1R2F-GP
R394
D51R3F-2-GP
TC5
ST100U6D3VBM-5GP
TC18
ST220U2D5VBM-4GP
TC19
ST220U6D3VDM-1TV-GP
UMA
DIS
DY
Do Not Stuff
BOM1
Wistron Corporation
21F, 88, Sec.1, Hsin Tai Wu Rd., Hsichih,
Taipei Hsien 221, Taiwan, R.O.C.
Title
Cantiga(6/7):VCC
Size C
Document Number
LT32M
Rev -1
Date: Tuesday, May 13, 2008
Sheet 13 of 54

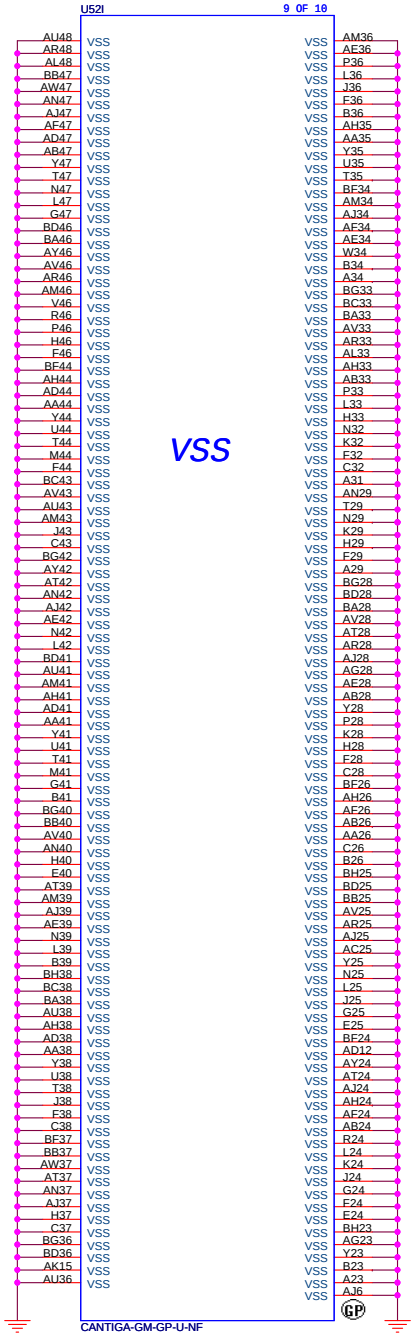


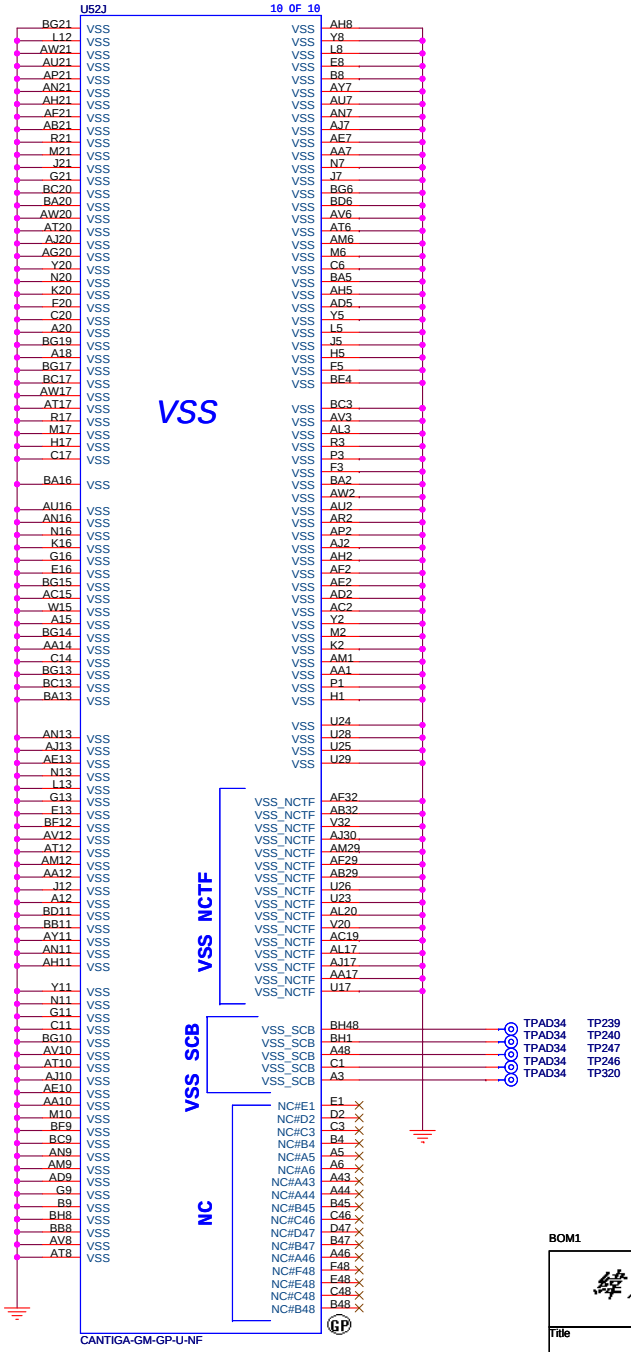


BOM1

緯創資通 **Wistron Corporation**
21F, 88, Sec.1, Hsin Tai Wu Rd., Hsichih,
Taipei Hsien 221, Taiwan, R.O.C.

Title: ***Cantiga(8/7):GND***

| Size | Document Number | Rev |
|---|---|---|
| A3 | LT32M | -1 |

Date: Tuesday, May 13, 2008 Sheet 14 of 54

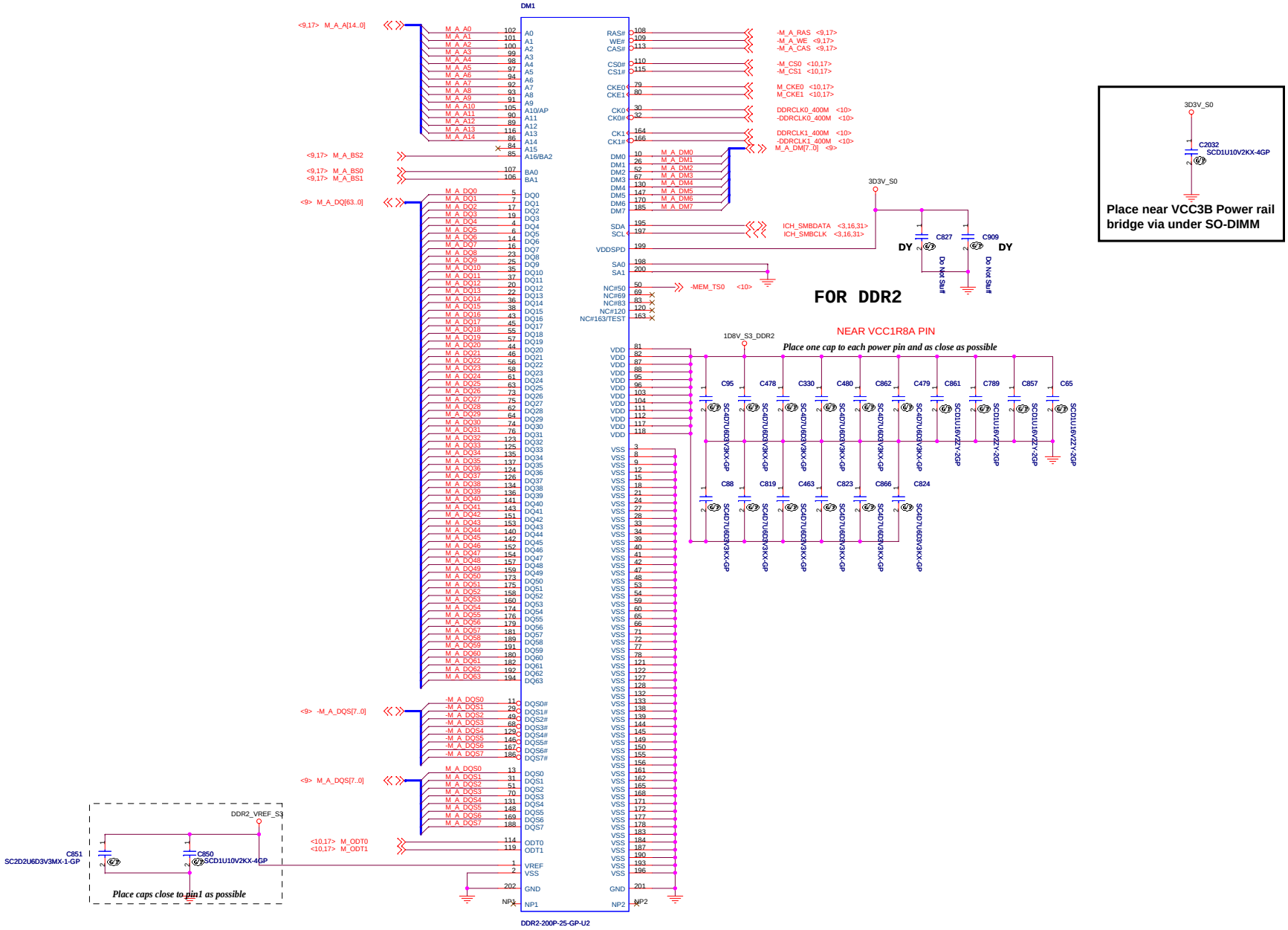


BOM1

**Wistron Corporation**
21F, 88, Sec.1, Hsin Tai Wu Rd., Hsichih, Taipei Hsien 221, Taiwan, R.O.C.

Title: **DDR2 SODIMM-A**

| Size | Document Number | Rev |
|---|---|---|
| C | LT32M | -1 |

Date: Tuesday, May 13, 2008 Sheet 15 of 54

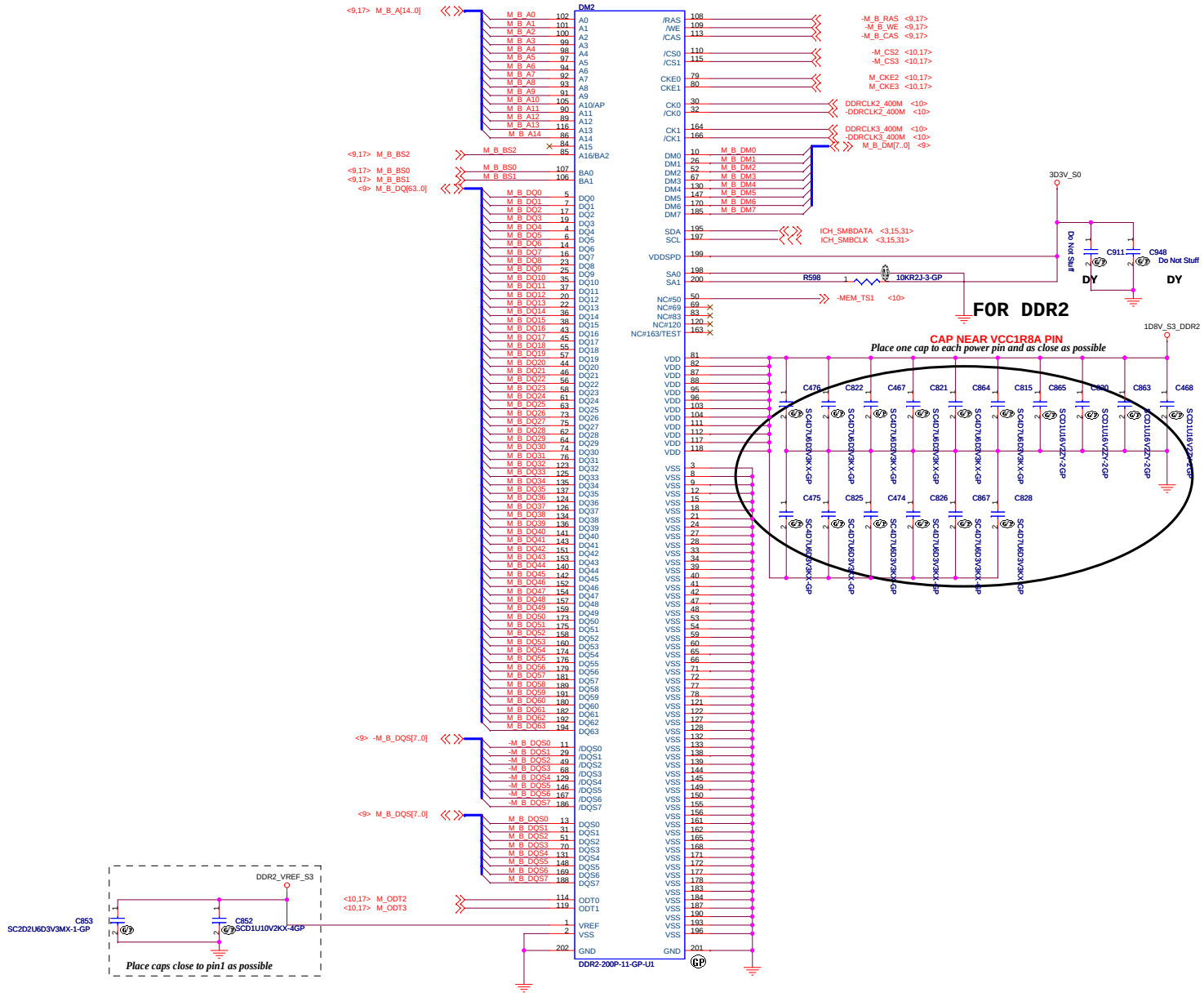


BOM1

Wistron Corporation
21F, 88, Sec.1, Hsin Tai Wu Rd., Hsichih, Taipei Hsien 221, Taiwan, R.O.C.

Title: DDR2 SODIMM-B

Size: C | Document Number: LT32M | Rev: -1

Date: Tuesday, May 13, 2008 | Sheet 16 of 54

# CHANNEL A PARALLEL TERMINATION

## FOR DDR2

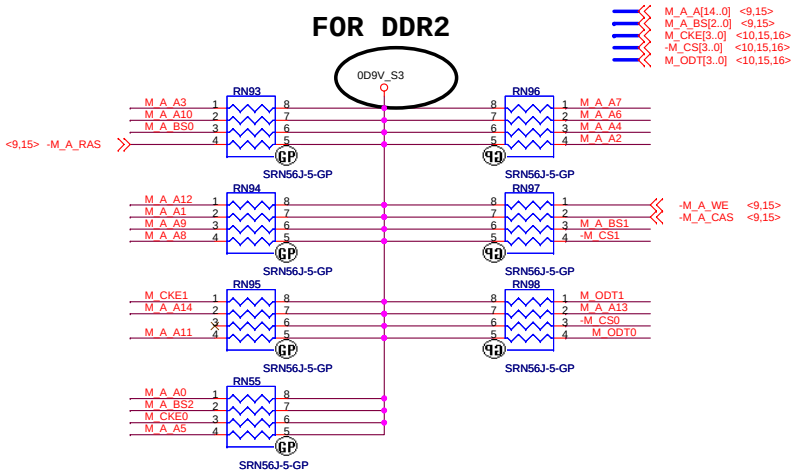


# CHANNEL B PARALLEL TERMINATION

## FOR DDR2

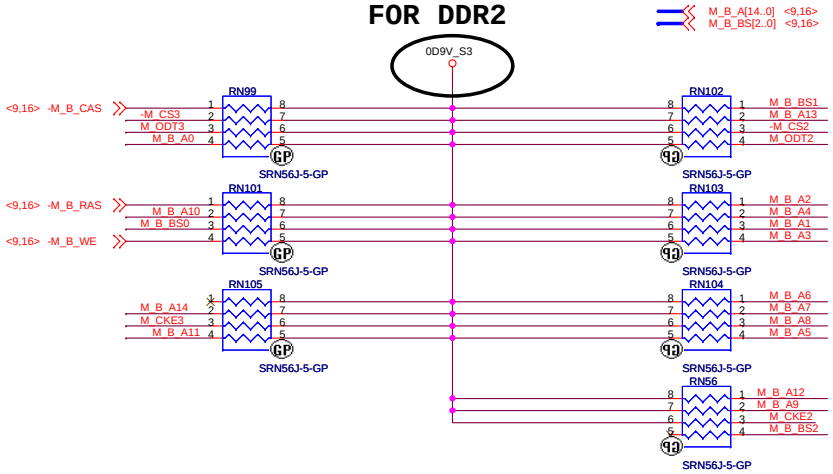


## FOR DDR2

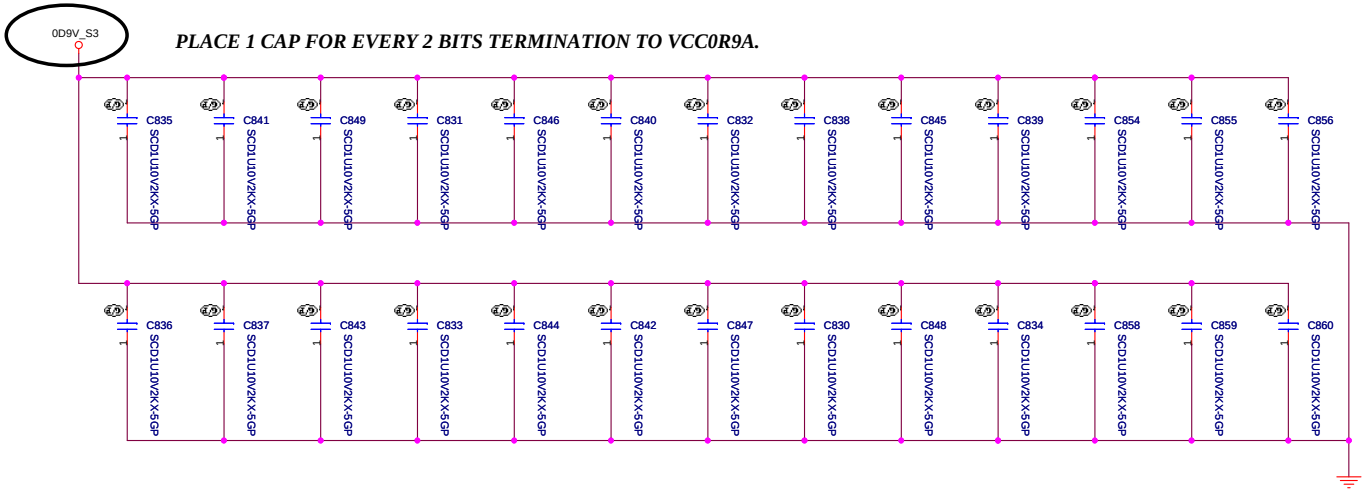


*PLACE 1 CAP FOR EVERY 2 BITS TERMINATION TO VCC0R9A.*

BOM1

緯創資通 **Wistron Corporation**
21F, 88, Sec.1, Hsin Tai Wu Rd., Hsichih,
Taipei Hsien 221, Taiwan, R.O.C.

Title: **DDR-2 TERMINATION/DECOUPLING**

| Size | Document Number | Rev |
|---|---|---|
| Custom | LT32M | -1 |

Date: Tuesday, May 13, 2008 Sheet 17 of 54

# LCD/INVERTER CONN

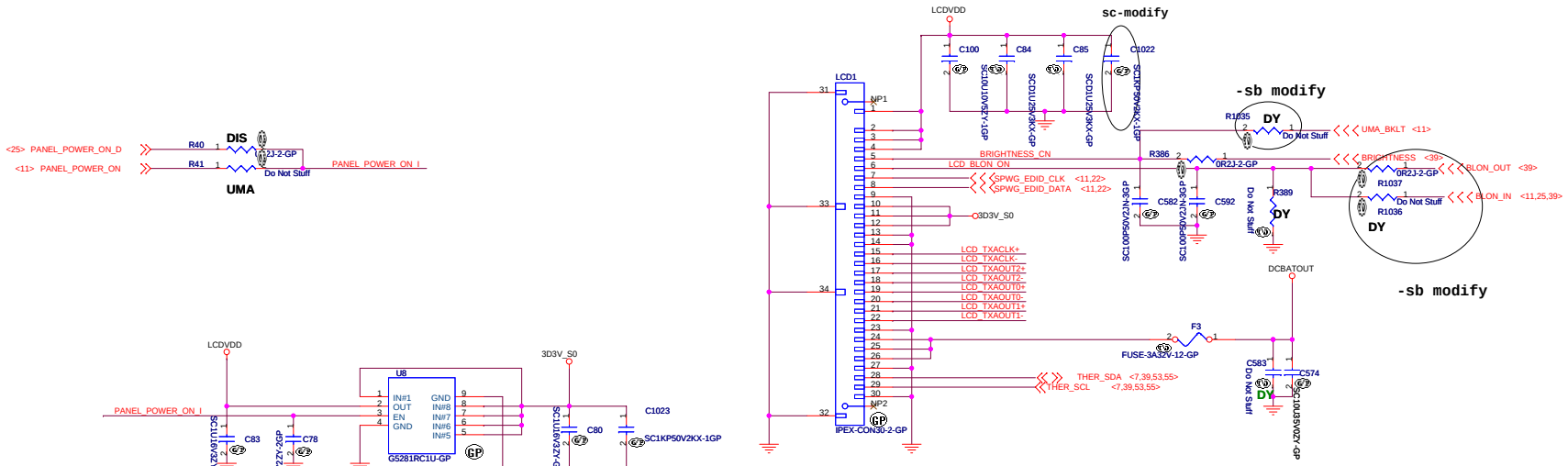


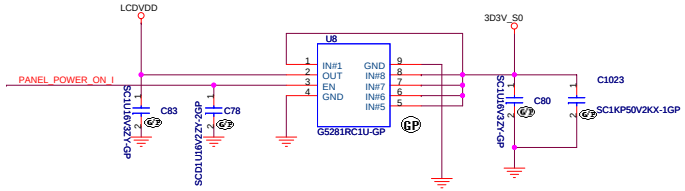


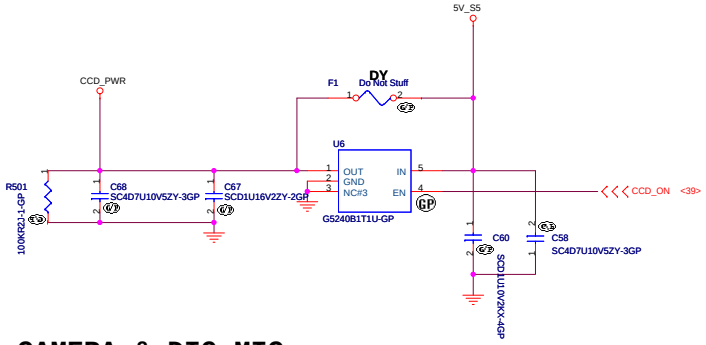


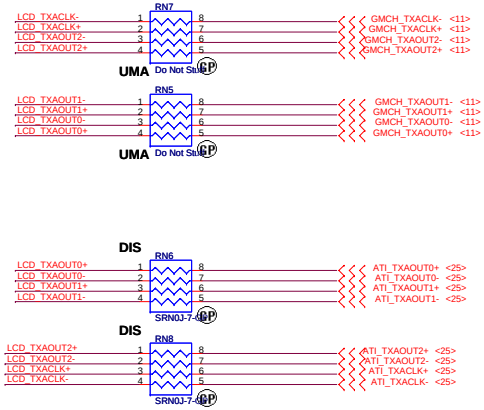


## CAMERA & DIG-MIC

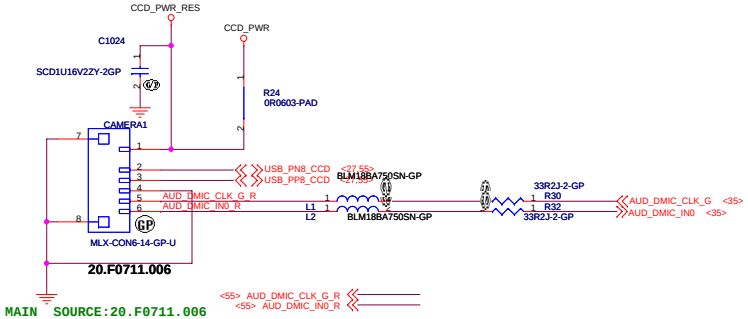


MAIN SOURCE:20.F0711.006
SECOND SOURCE:20.F0693.006

BOM1

| | | |
|---|---|---|
| 緯創資通 | **Wistron Corporation** 21F, 88, Sec.1, Hsin Tai Wu Rd., Hsichih, Taipei Hsien 221, Taiwan, R.O.C. | |
| Title | *LCD CONN & CAMERA & DIG-MIC* | |
| Size | Document Number: LT32M | Rev: -1 |
| Date: Tuesday, May 13, 2008 | Sheet 18 of 54 | |

# CRT I/F & CONNECTOR

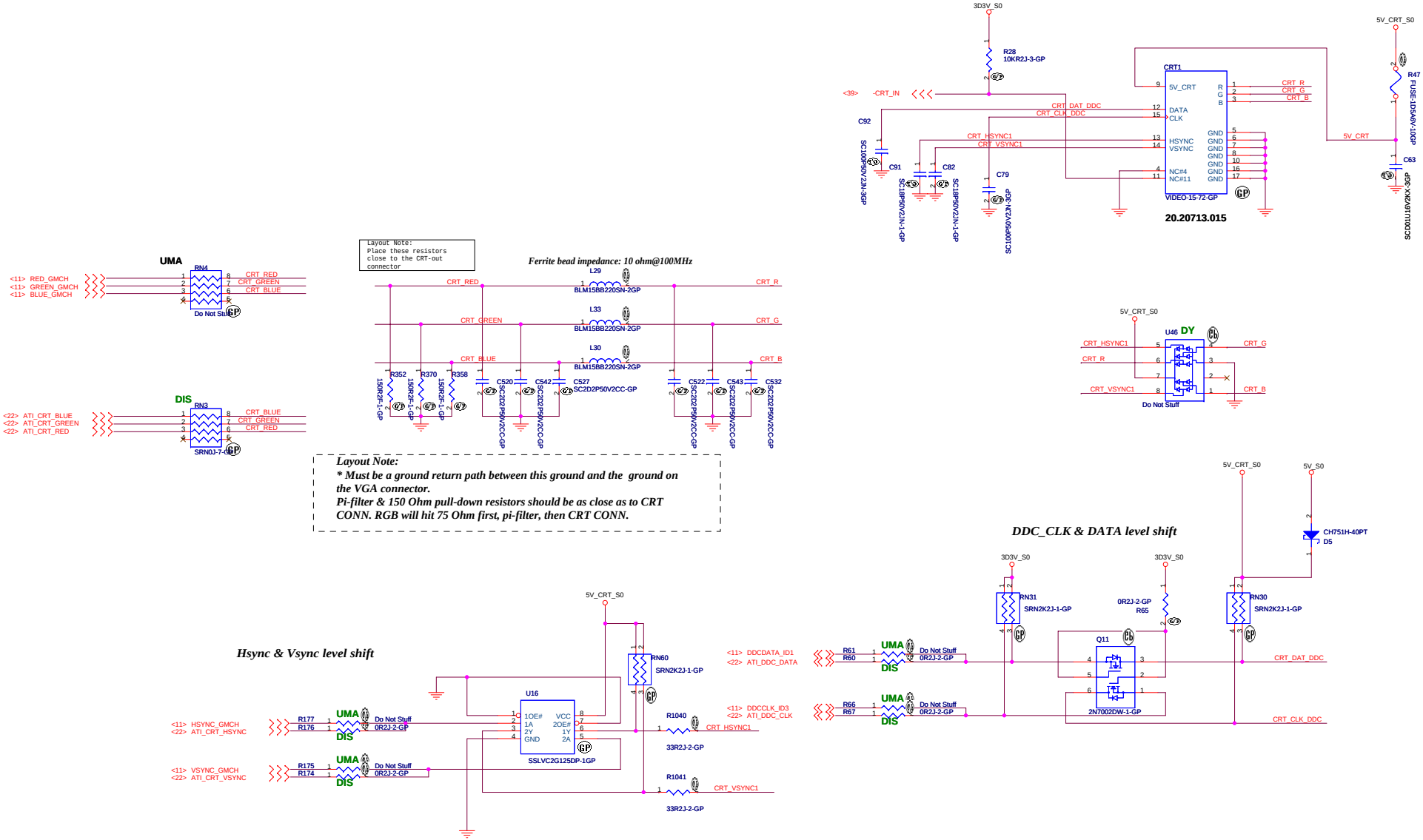


| | | |
|---|---|---|
| 緯創資通 Wistron Corporation<br>21F, 88, Sec.1, Hsin Tai Wu Rd., Hsichih, Taipei Hsien 221, Taiwan, R.O.C. | | |
| Title: CRT/TV Connector | | |
| Size | Document Number: LT32M | Rev: -1 |
| Date: Tuesday, May 13, 2008 | Sheet 19 of 54 | |

# GDDR3 16MX32 MEMORY

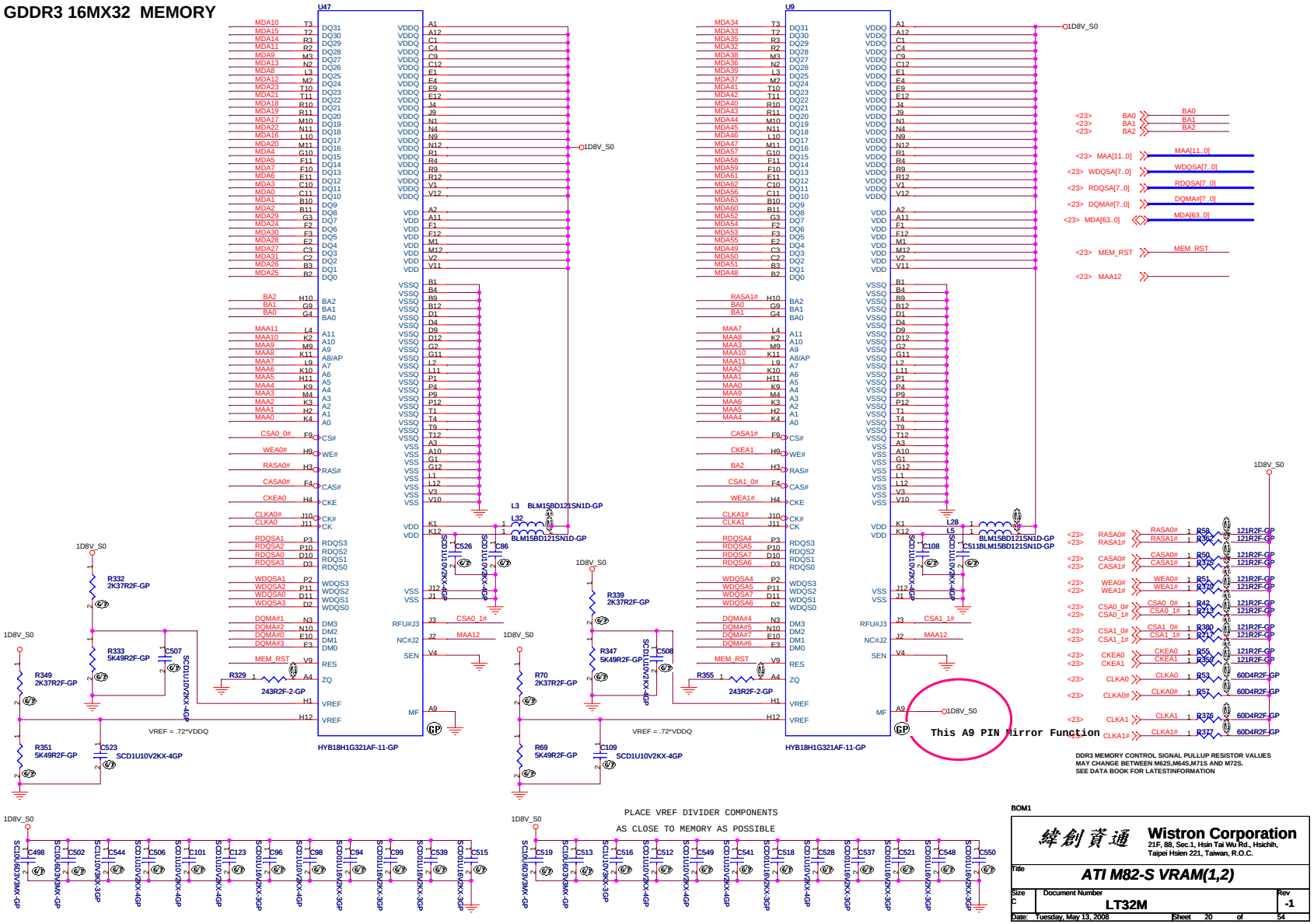


PLACE VREF DIVIDER COMPONENTS
AS CLOSE TO MEMORY AS POSSIBLE

BOM1


緯創資通 Wistron Corporation
21F, 88, Sec.1, Hsin Tai Wu Rd., Hsichih,
Taipei Hsien 221, Taiwan, R.O.C.


Title: **ATI M82-S VRAM(1,2)**

| Size | Document Number | Rev |
|---|---|---|
| C | LT32M | -1 |

Date: Tuesday, May 13, 2008 Sheet 20 of 54

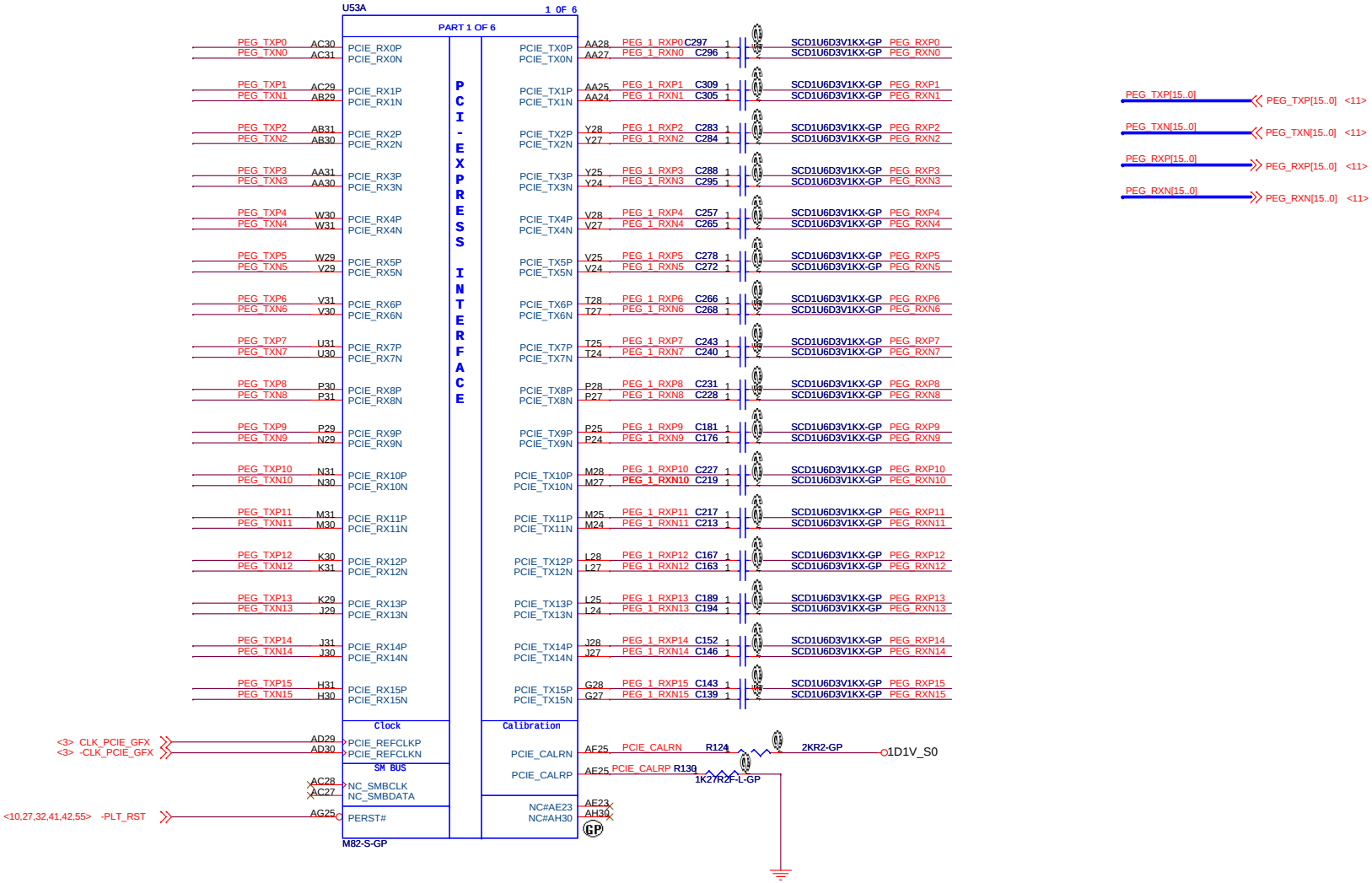


BOM1


緯創資通 Wistron Corporation
21F, 88, Sec.1, Hsin Tai Wu Rd., Hsichih,
Taipei Hsien 221, Taiwan, R.O.C.


Title: **ATI M82-S(1/6):PCIE Interface**

| Size | Document Number | Rev |
|---|---|---|
| A3 | LT32M | -1 |

Date: Tuesday, May 13, 2008 Sheet 21 of 54

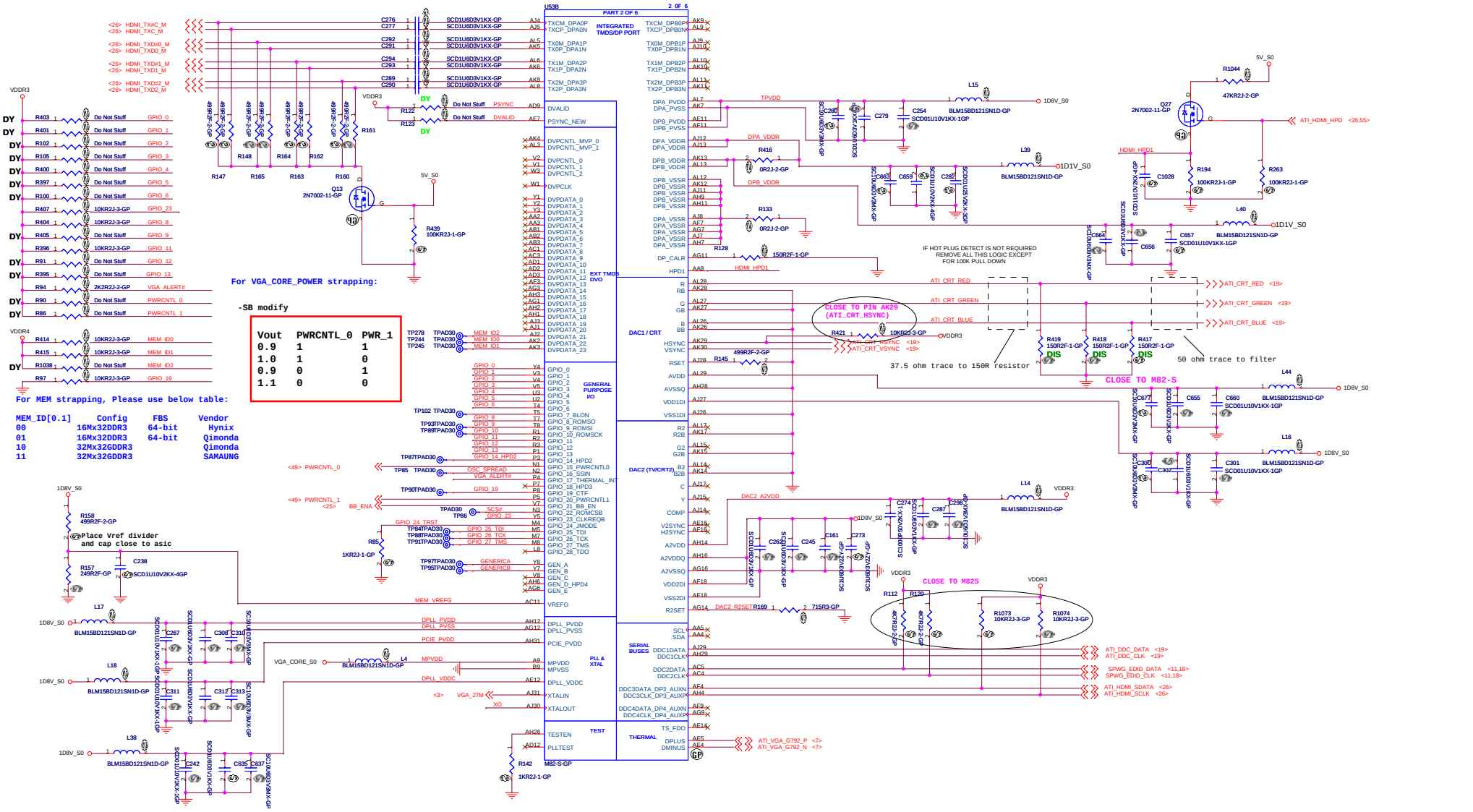


BOM1

Wistron Corporation
21F, 88, Sec.1, Hsin Tai Wu Rd., Hsichih, Taipei Hsien 221, Taiwan, R.O.C.

Title: ATI M82-S(2/6):CRT/HDMI

Size: A2 | Document Number: LT32M | Rev: -1

Date: Tuesday, May 13, 2008 | Sheet 22 of 54

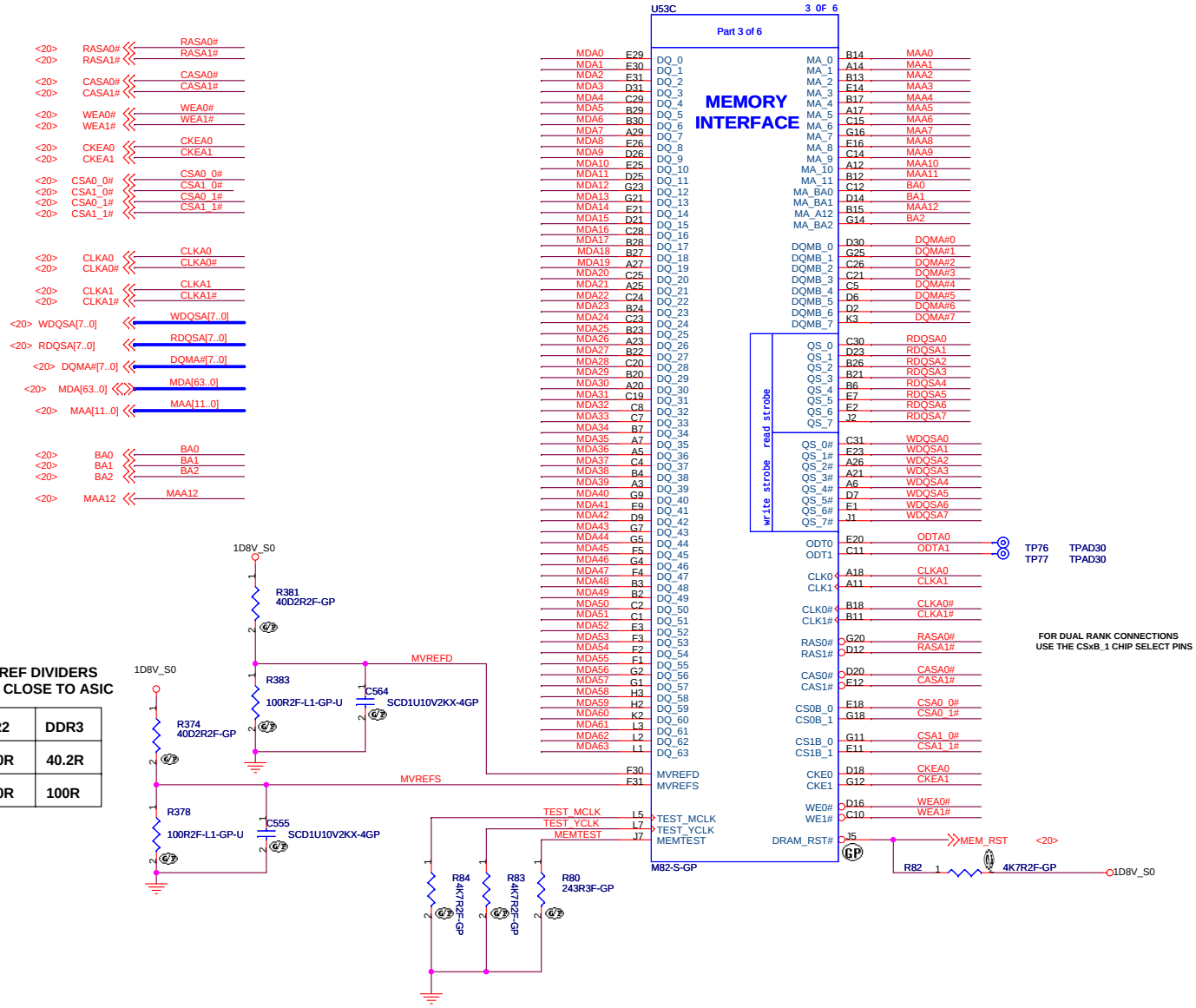


**PLACE MVREF DIVIDERS AND CAPS CLOSE TO ASIC**

| DIVIDER RESISTORS | DDR2 | DDR3 |
|---|---|---|
| MVREF TO 1.8V | 100R | 40.2R |
| MVREF TO GND | 100R | 100R |

BOM1


緯創資通 Wistron Corporation
21F, 88, Sec.1, Hsin Tai Wu Rd., Hsichih,
Taipei Hsien 221, Taiwan, R.O.C.


Title: **ATI M82-S(3/6):Memory Interface**

| Size | Document Number | Rev |
|---|---|---|
| A3 | LT32M | -1 |

Date: Tuesday, May 13, 2008 Sheet 23 of 54

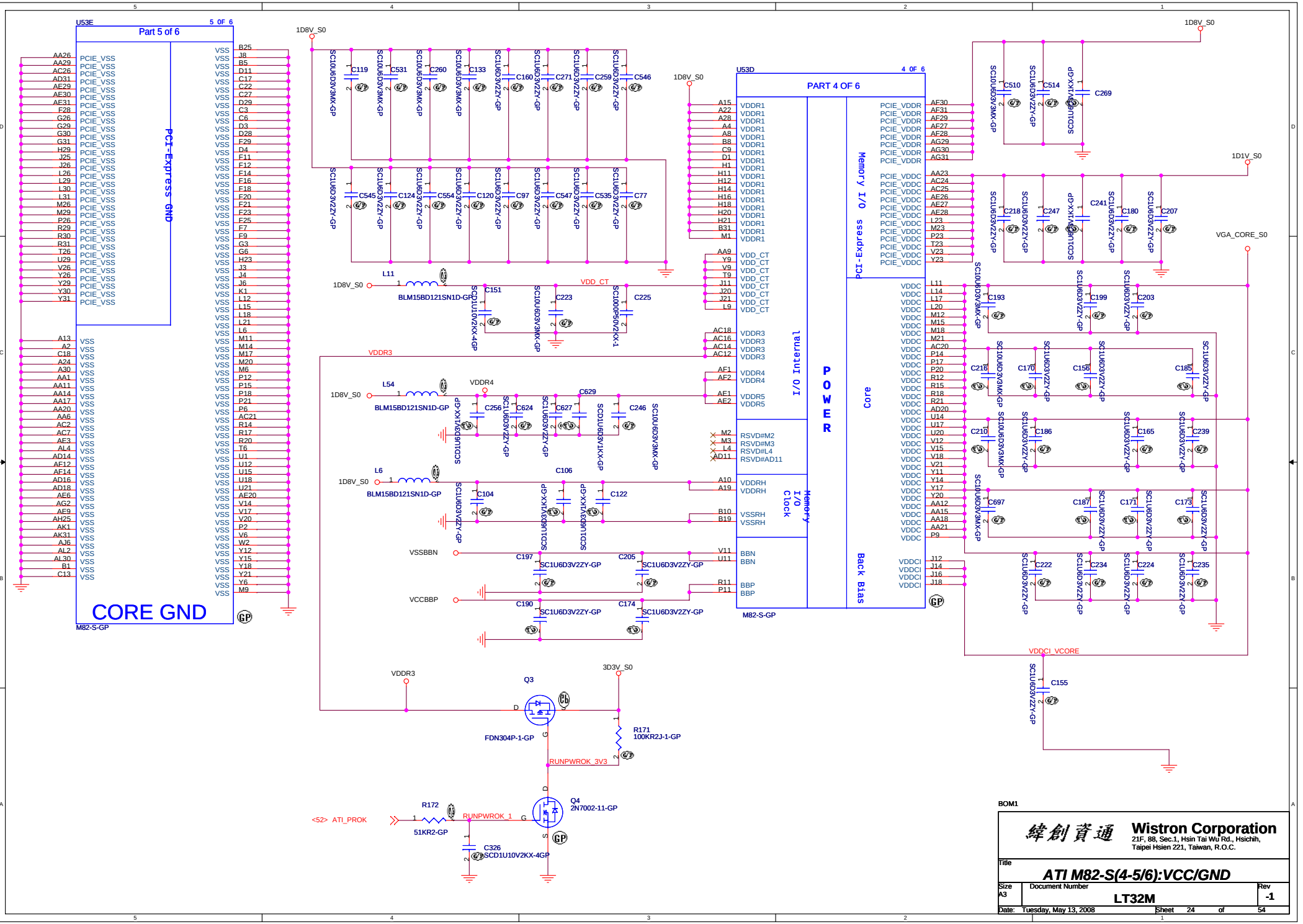
U53E
5 OF 6
Part 5 of 6
PCI-Express GND
CORE GND
M82-S-GP
U53D
4 OF 6
PART 4 OF 6
I/O Internal
POWER
Memory I/O
PCI-Express
Core
Back Bias
Memory I/O Clock
M82-S-GP
1D8V_S0
1D1V_S0
VGA_CORE_S0
VDD_CT
VDDR3
VDDR4
VDDCI_VCORE
VSSBBN
VCCBBP
3D3V_S0
RUNPWROK_3V3
RUNPWROK_1
<52> ATI_PROK
Q3
FDN304P-1-GP
Q4
2N7002-11-GP
R171
100KR2J-1-GP
R172
51KR2-GP
L11
BLM15BD121SN1D-GP
L54
BLM15BD121SN1D-GP
L6
BLM15BD121SN1D-GP
BOM1
Wistron Corporation
21F, 88, Sec.1, Hsin Tai Wu Rd., Hsichih,
Taipei Hsien 221, Taiwan, R.O.C.
Title
ATI M82-S(4-5/6):VCC/GND
Size
A3
Document Number
LT32M
Rev
-1
Date: Tuesday, May 13, 2008
Sheet 24 of 54

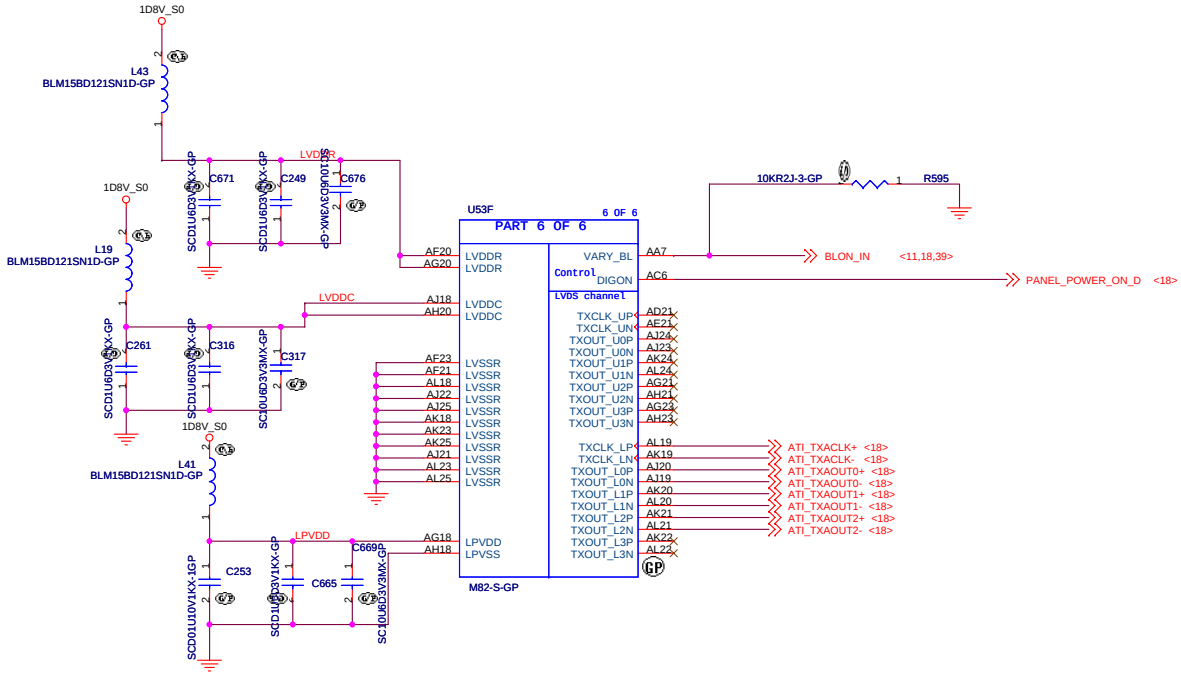


BOM1

**Wistron Corporation**
21F, 88, Sec.1, Hsin Tai Wu Rd., Hsichih,
Taipei Hsien 221, Taiwan, R.O.C.

Title: ***ATI M82-S(6/6):LVDS***

| Size | Document Number | Rev |
|---|---|---|
| Custom | LT32M | -1 |

Date: Tuesday, May 13, 2008 Sheet 25 of 54

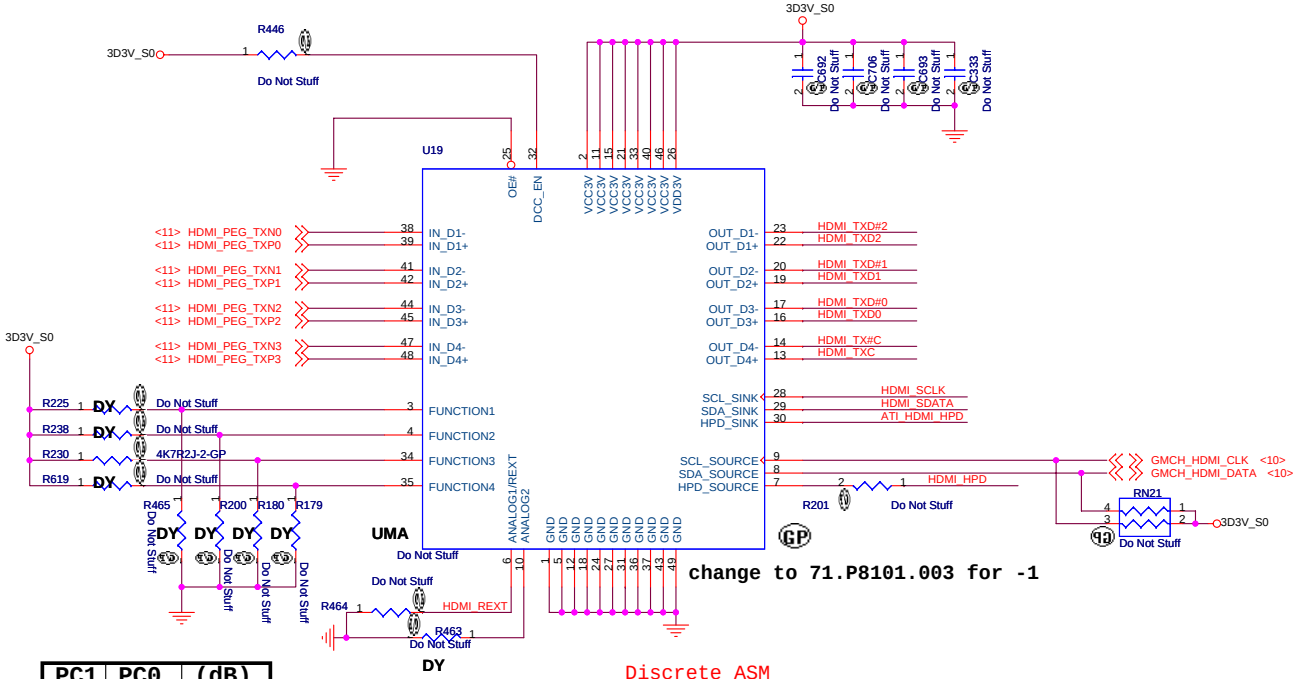


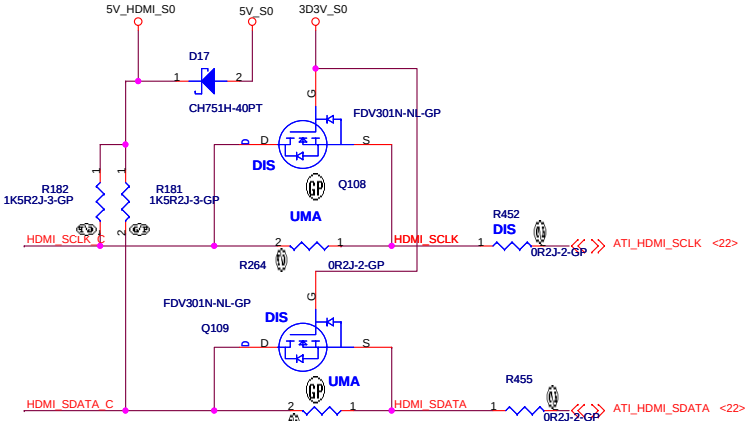


| PC1 | PC0 | (dB) |
|---|---|---|
| 0 | 0 | 8 |
| 0 | 1 | 4 |
| 1 | 0 | 12 |
| 1 | 1 | 0 |

Discrete ASM

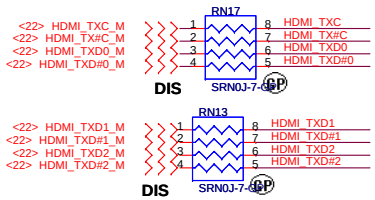


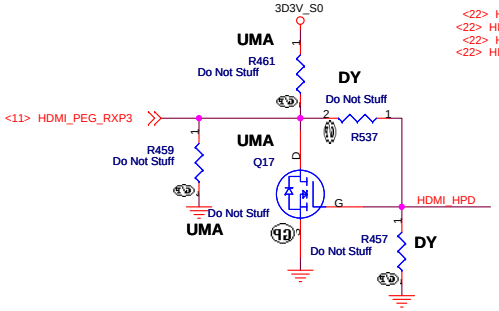


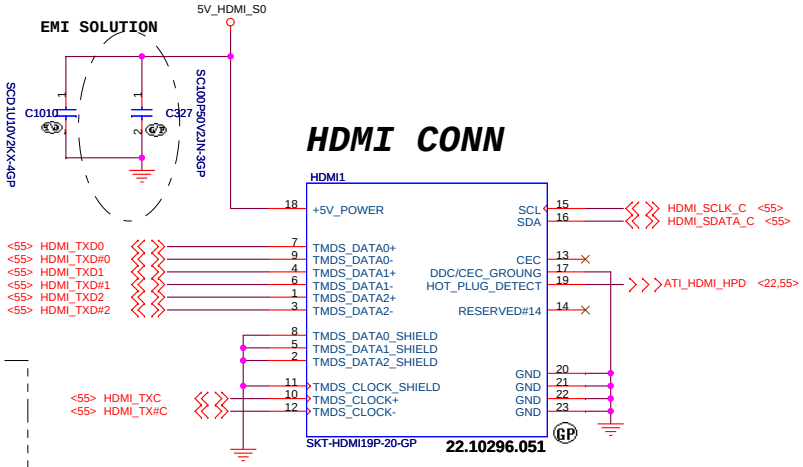


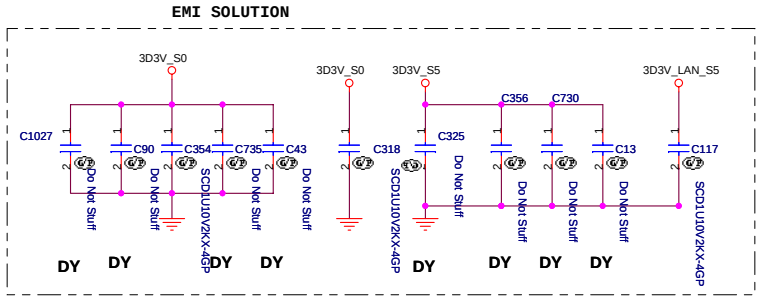


BOM1


緯創資通 Wistron Corporation
21F, 88, Sec.1, Hsin Tai Wu Rd., Hsichih,
Taipei Hsien 221, Taiwan, R.O.C.


| Title | HDMI CONN | |
|---|---|---|
| Size A3 | Document Number LT32M | Rev SB |
| Date: Tuesday, May 13, 2008 | Sheet 26 of 54 | |

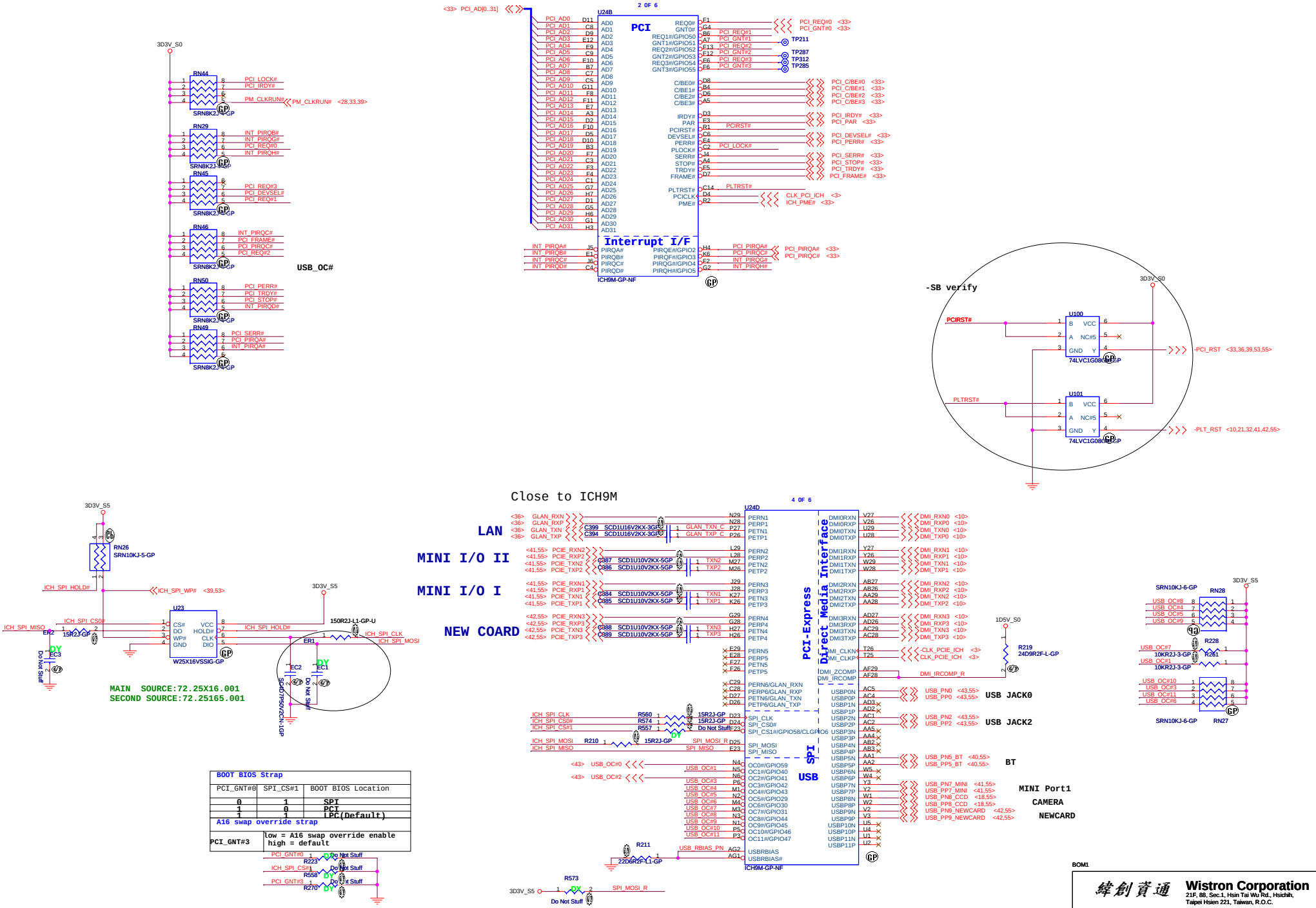
PCI
Interrupt I/F
ICH9M-GP-NF
USB_OC#
-SB verify
Close to ICH9M
LAN
MINI I/O II
MINI I/O I
NEW COARD
PCI-Express
Direct Media Interface
SPI
USB
USB JACK0
USB JACK2
BT
MINI Port1
CAMERA
NEWCARD
MAIN SOURCE:72.25X16.001
SECOND SOURCE:72.25165.001
BOOT BIOS Strap
PCI_GNT#0 | SPI_CS#1 | BOOT BIOS Location
0 | 1 | SPI
1 | 0 | PCI
1 | 1 | LPC(Default)
A16 swap override strap
PCI_GNT#3 | low = A16 swap override enable high = default
Wistron Corporation
21F, 88, Sec.1, Hsin Tai Wu Rd., Hsichih, Taipei Hsien 221, Taiwan, R.O.C.
ICH9-M (1 of 4)
LT32M
Tuesday, May 13, 2008
Sheet 27 of 54

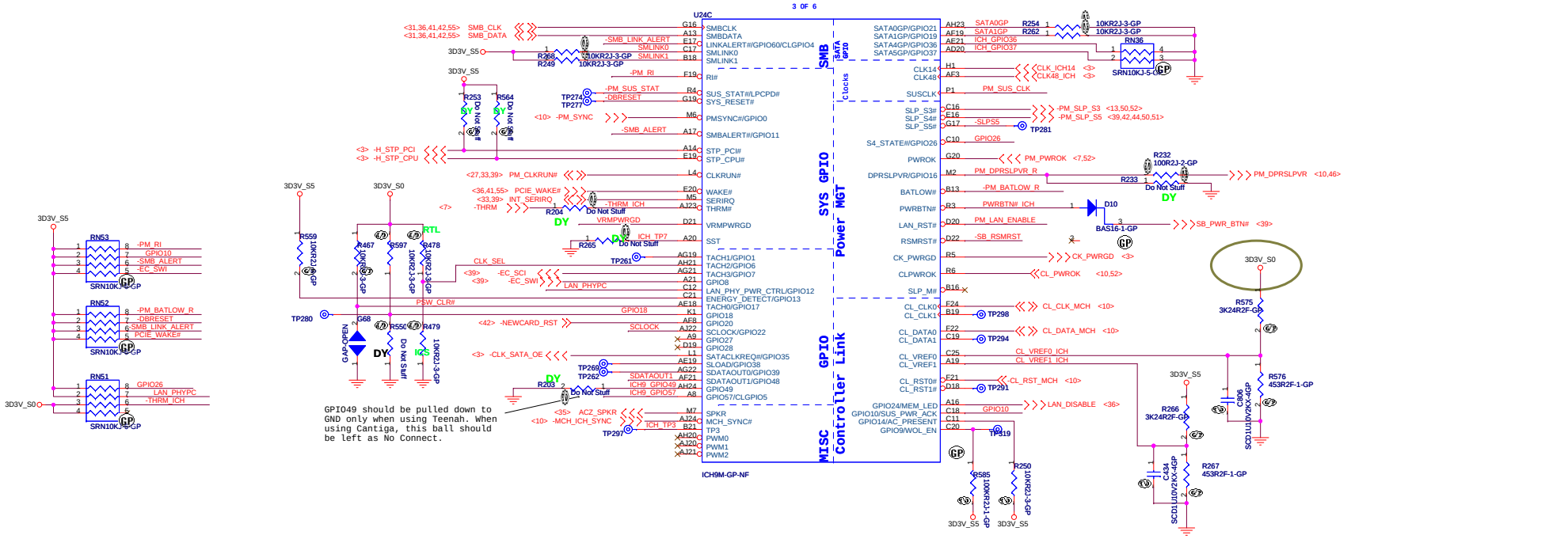


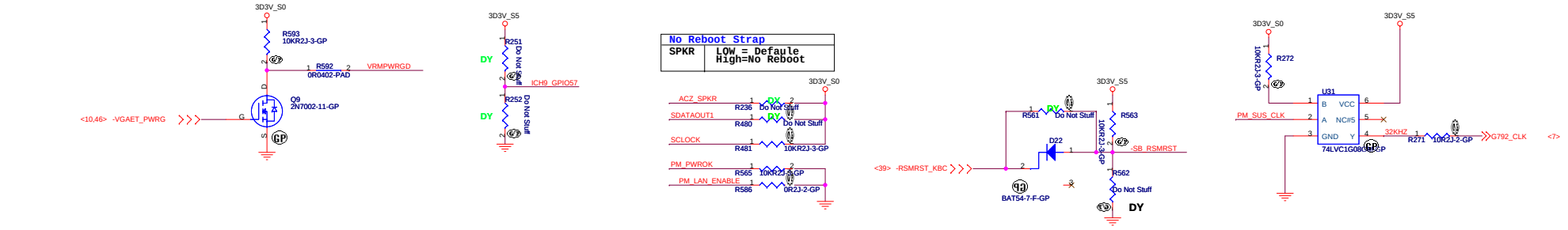


BOM1

| | | |
|---|---|---|
| 緯創資通 | **Wistron Corporation** 21F, 88, Sec.1, Hsin Tai Wu Rd., Hsichih, Taipei Hsien 221, Taiwan, R.O.C. | |
| Title | ***ICH9-M (2 of 4)*** | |
| Size | Document Number: **LT32M** | Rev: -1 |
| Date: Tuesday, May 13, 2008 | Sheet 28 of 54 | |

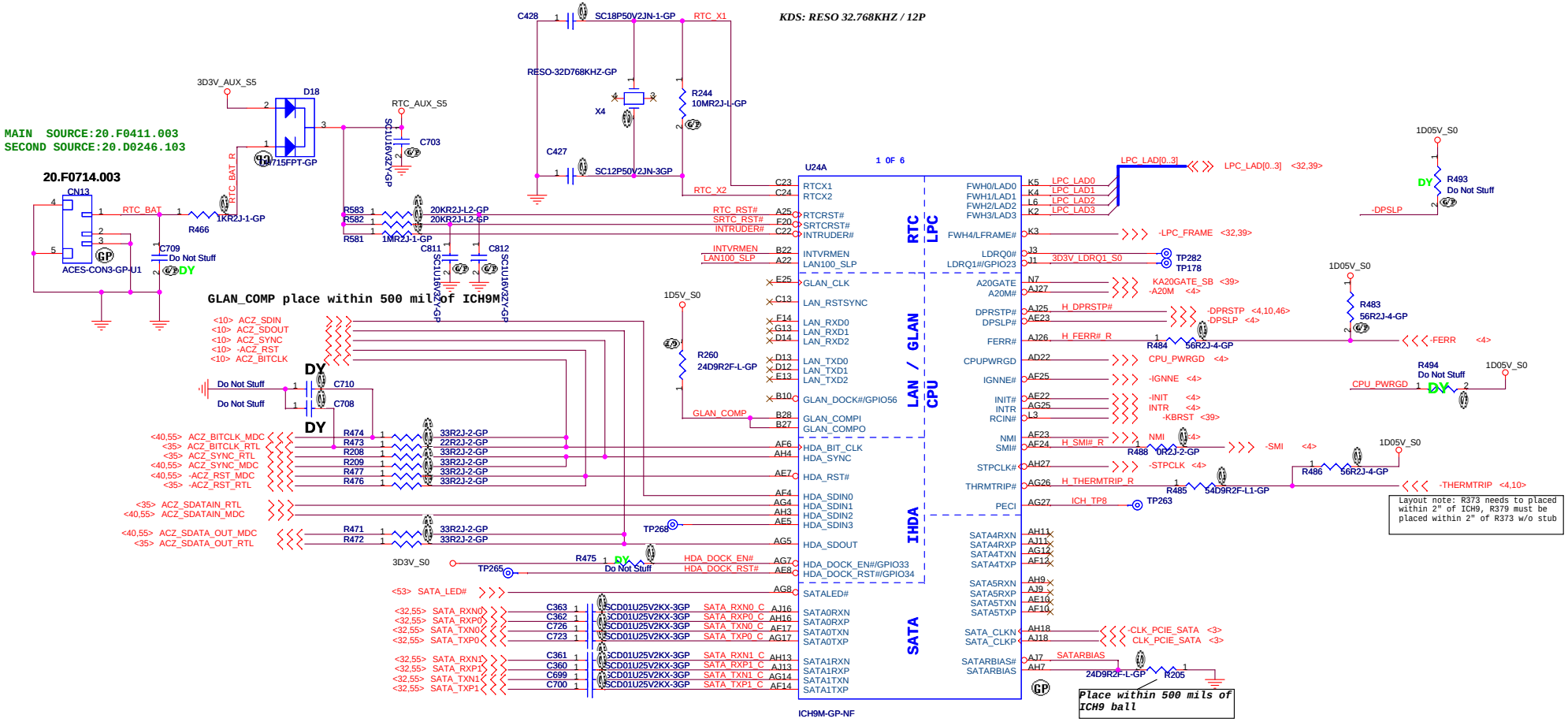


| integrated VccSus1_05,VccSus1_5,VccCL1_5 | |
|---|---|
| INTVRMEN | High=Enable Low=Disable |
| integrated VccLan1_05VccCL1_05 | |
| LAN100_SLP | High=Enable Low=Disable |

BOM1

緯創資通 **Wistron Corporation**
21F, 88, Sec.1, Hsin Tai Wu Rd., Hsichih,
Taipei Hsien 221, Taiwan, R.O.C.

Title: *ICH9-M (1 of 4)*

| Size | Document Number | Rev |
|---|---|---|
| | LT32M | -1 |

Date: Tuesday, May 13, 2008 Sheet 29 of 54

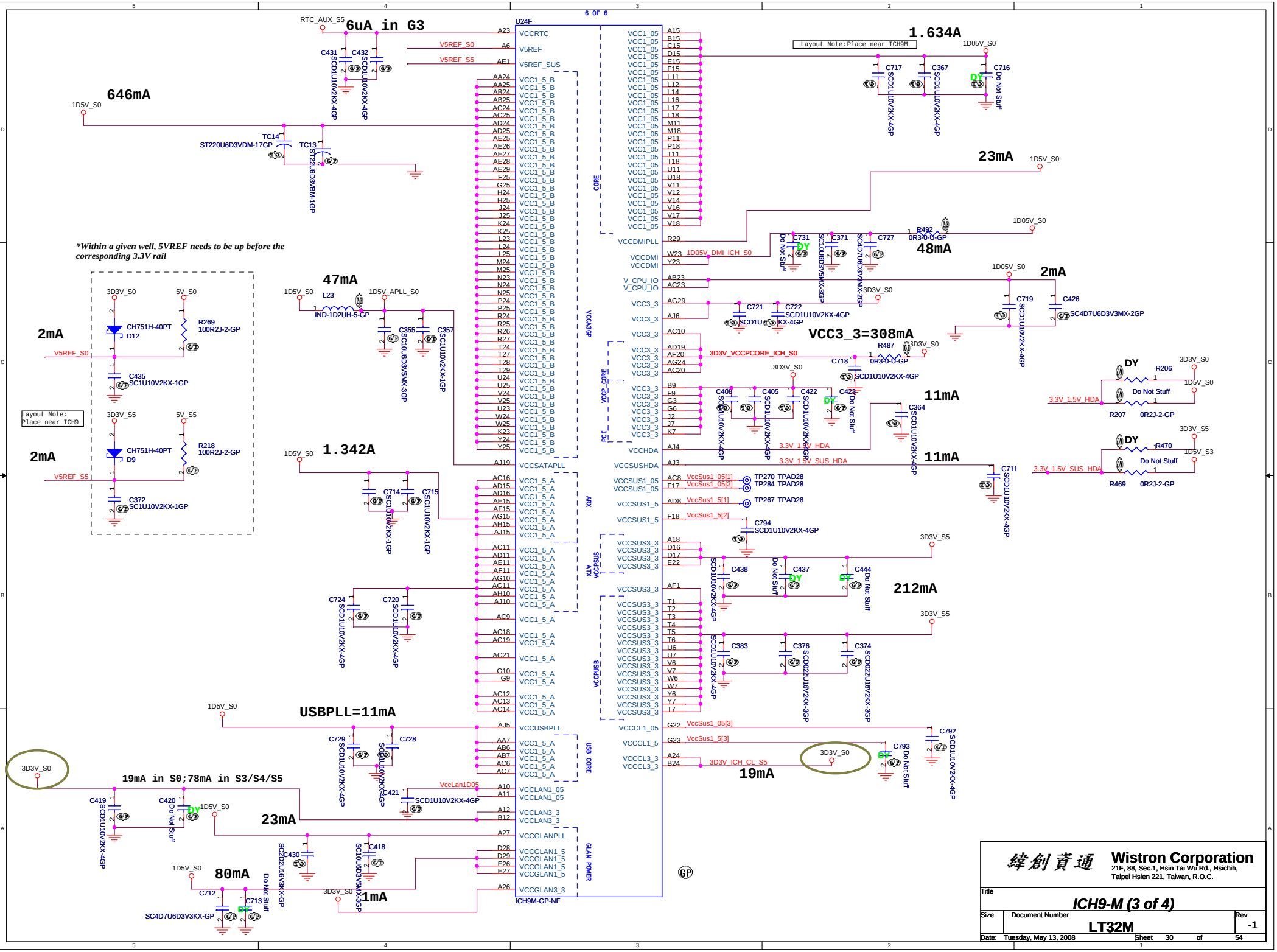
6uA in G3
646mA
1.634A
23mA
48mA
2mA
47mA
VCC3_3=308mA
11mA
1.342A
212mA
USBPLL=11mA
19mA in S0;78mA in S3/S4/S5
23mA
80mA
1mA
19mA
*Within a given well, 5VREF needs to be up before the corresponding 3.3V rail
Layout Note:Place near ICH9M
Layout Note: Place near ICH9
U24F
6 OF 6
ICH9M-GP-NF
Wistron Corporation
21F, 88, Sec.1, Hsin Tai Wu Rd., Hsichih, Taipei Hsien 221, Taiwan, R.O.C.
Title
ICH9-M (3 of 4)
Size
Document Number
LT32M
Rev
-1
Date: Tuesday, May 13, 2008
Sheet 30 of 54

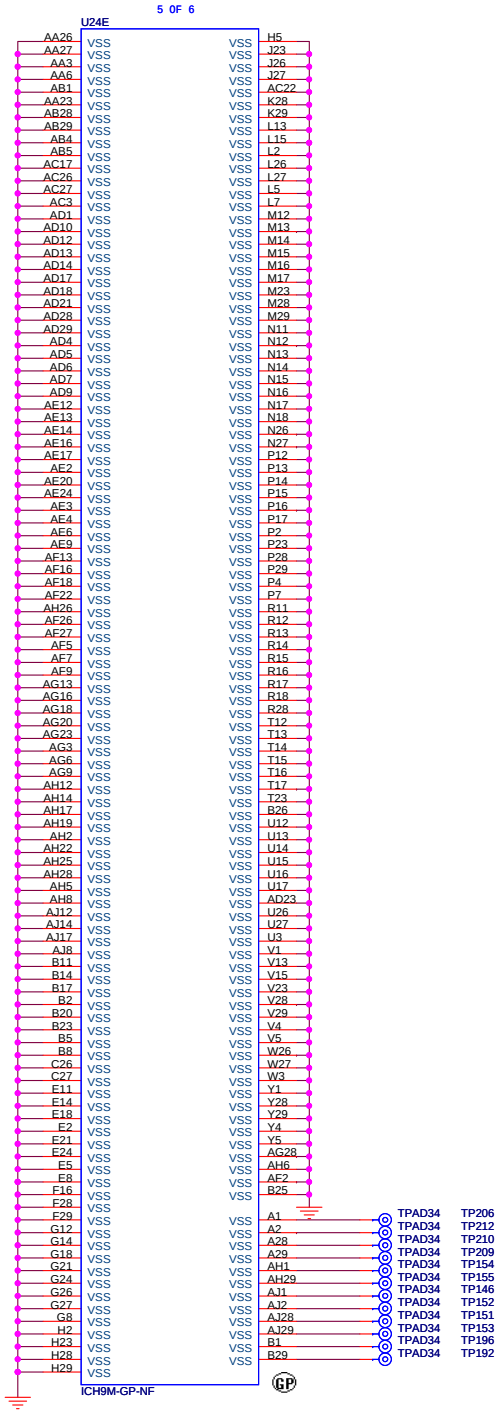


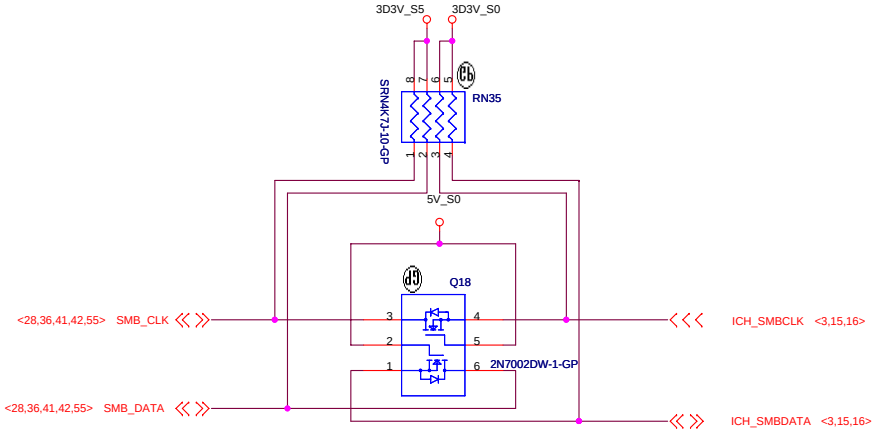


*Q13 & Q14 connect SMLINK and SMBUS in S) for SMBus 2.0 compliance*

## SMBUS


緯創資通 Wistron Corporation
21F, 88, Sec.1, Hsin Tai Wu Rd., Hsichih,
Taipei Hsien 221, Taiwan, R.O.C.


| Title | | |
|---|---|---|
| ICH9-M (4 of 4) | | |
| Size | Document Number | Rev |
| | LT32M | -1 |
| Date: Tuesday, May 13, 2008 | Sheet 31 of 54 | |

# SATA HD Connector

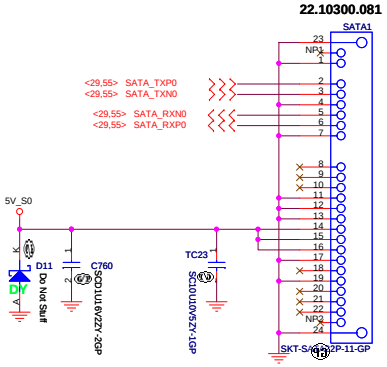


MAIN SOURCE:22.10300.081
SECOND SOURCE:20.80919.022

# ODD Connector

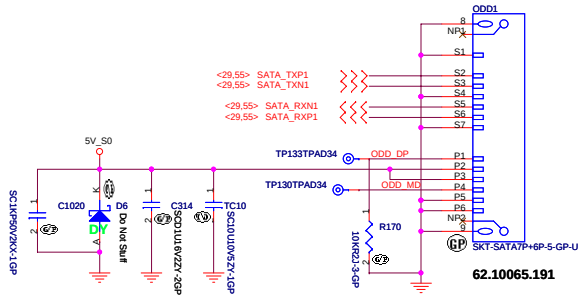


**Olympus LED's Location and Sequence**

| Left side | | | | Right side |
|---|---|---|---|---|
| TouchPad-MUTE | POWER | Battery | WLAN | |
| LED1 | LED3 LED8 | LED4 LED5 | LED6 LED7 | |

## GOLDEN FINGER FOR DEBUG BOARD

**TOP VIEW**

| | |
|---|---|
| A15 | (B1) |
| A14 | (B2) |
| ⋮ | ⋮ |
| A2 | (B14) |
| A1 | (B15) |

**(BOTTOM VIEW)**

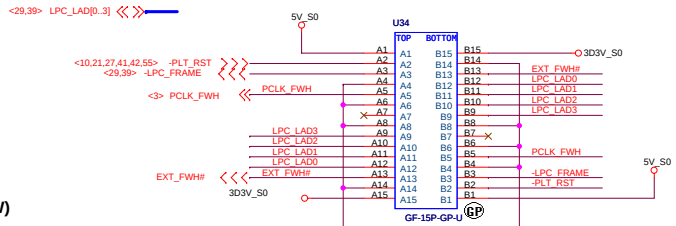


**Boot Device must have ID[3:0] = 0000**
**Has internal pull-down resistors**
**All may be left floated**
**FPET7 Elec. P3-46**

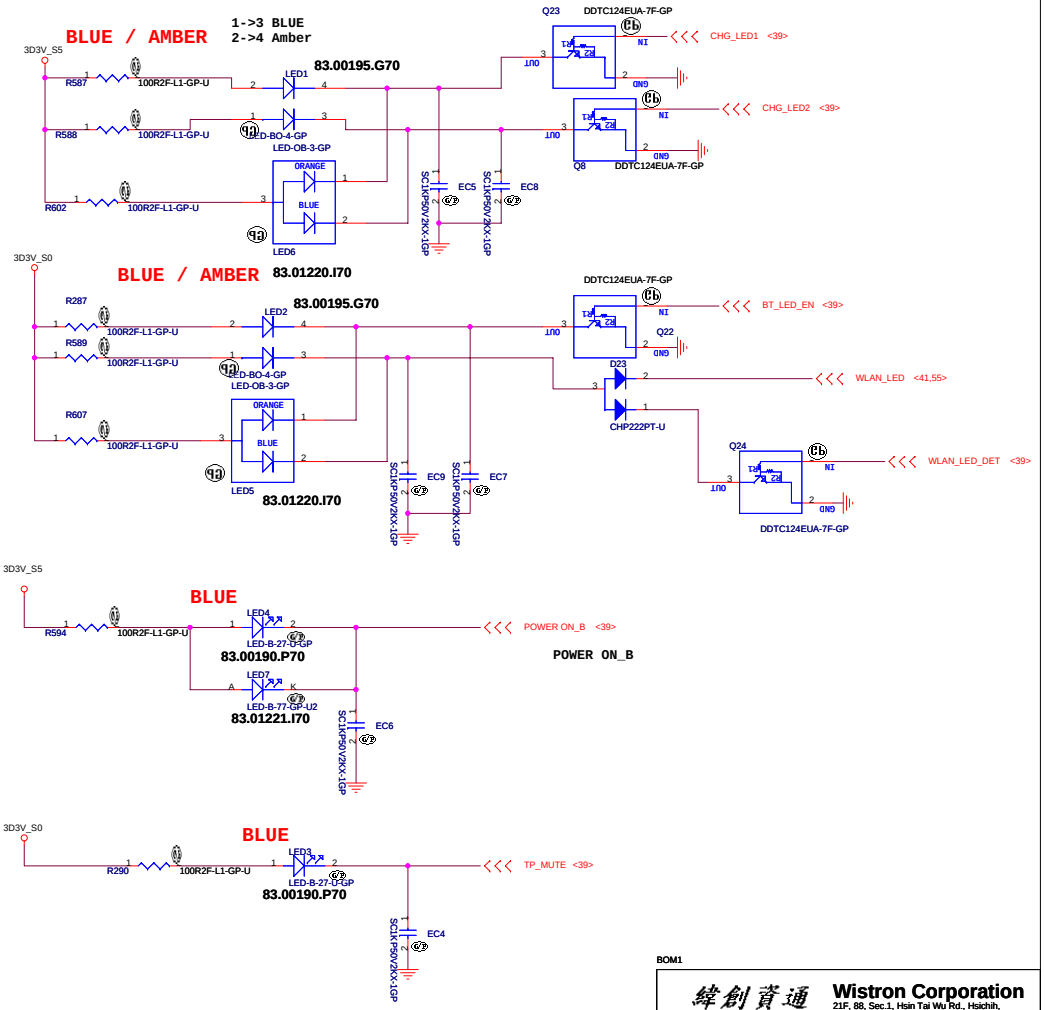


BOM1

| | |
|---|---|
| 緯創資通 | **Wistron Corporation** 21F, 88, Sec.1, Hsin Tai Wu Rd., Hsichih, Taipei Hsien 221, Taiwan, R.O.C. |
| Title | ***HDD/CDROM/DEBUG / LEDS*** |
| Size / Document Number | **LT32M** |
| Rev | -1 |
| Date: Tuesday, May 13, 2008 | Sheet 32 of 54 |

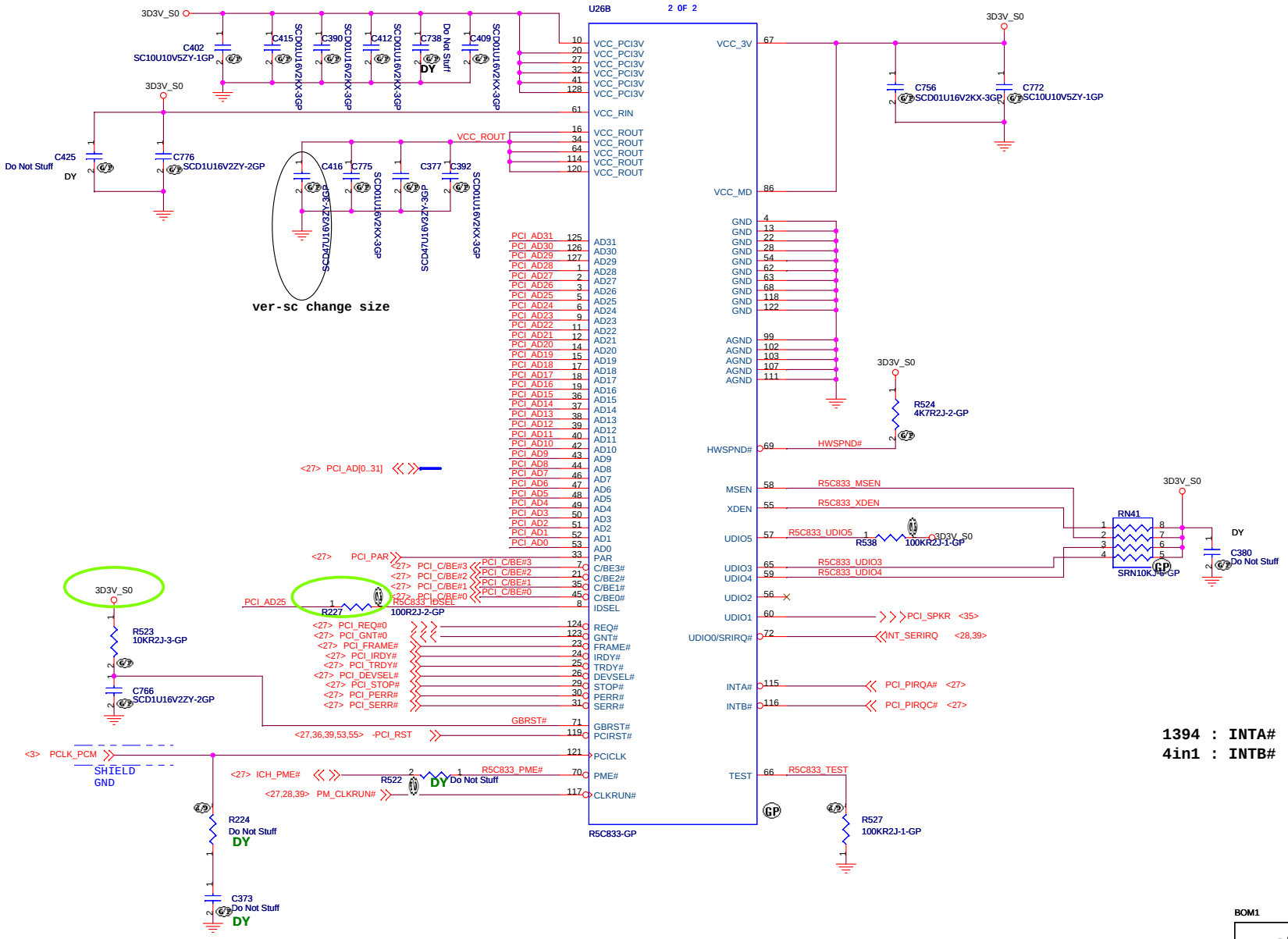


BOM1

| | | |
|---|---|---|
| 緯創資通 | **Wistron Corporation**<br>21F, 88, Sec.1, Hsin Tai Wu Rd., Hsichih,<br>Taipei Hsien 221, Taiwan, R.O.C. | |
| Title | ***R5C832/PCI*** | |
| Size A3 | Document Number **LT32M** | Rev **-1** |
| Date: Tuesday, May 13, 2008 | Sheet 33 of 54 | |

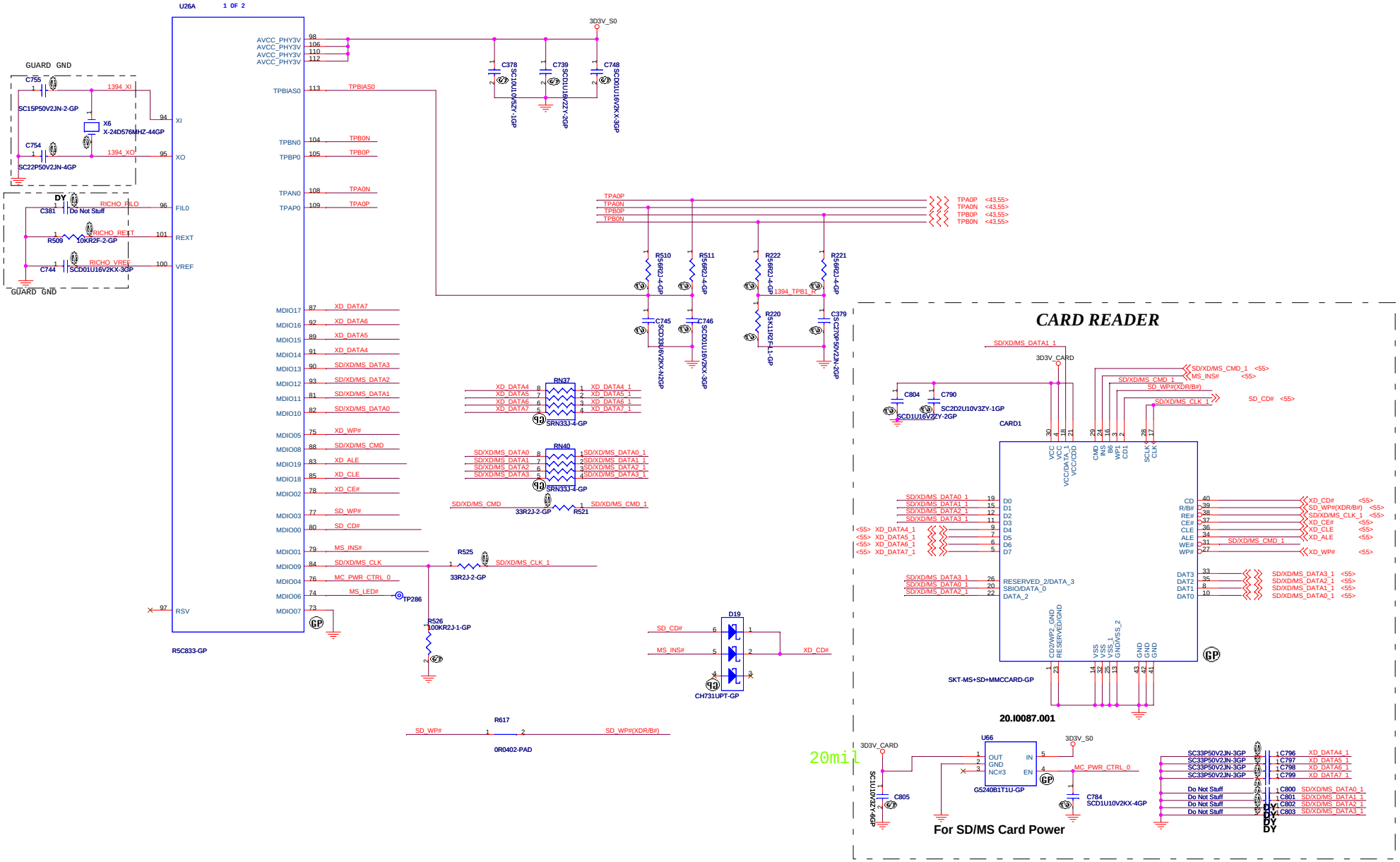


BOM1

**Wistron Corporation**
21F, 88, Sec.1, Hsin Tai Wu Rd., Hsichih,
Taipei Hsien 221, Taiwan, R.O.C.

Title: **R5C832/IEEE1394/SD/BT**

| Size | Document Number | Rev |
|---|---|---|
| C | LT32M | -1 |

Date: Tuesday, May 13, 2008 Sheet 34 of 54

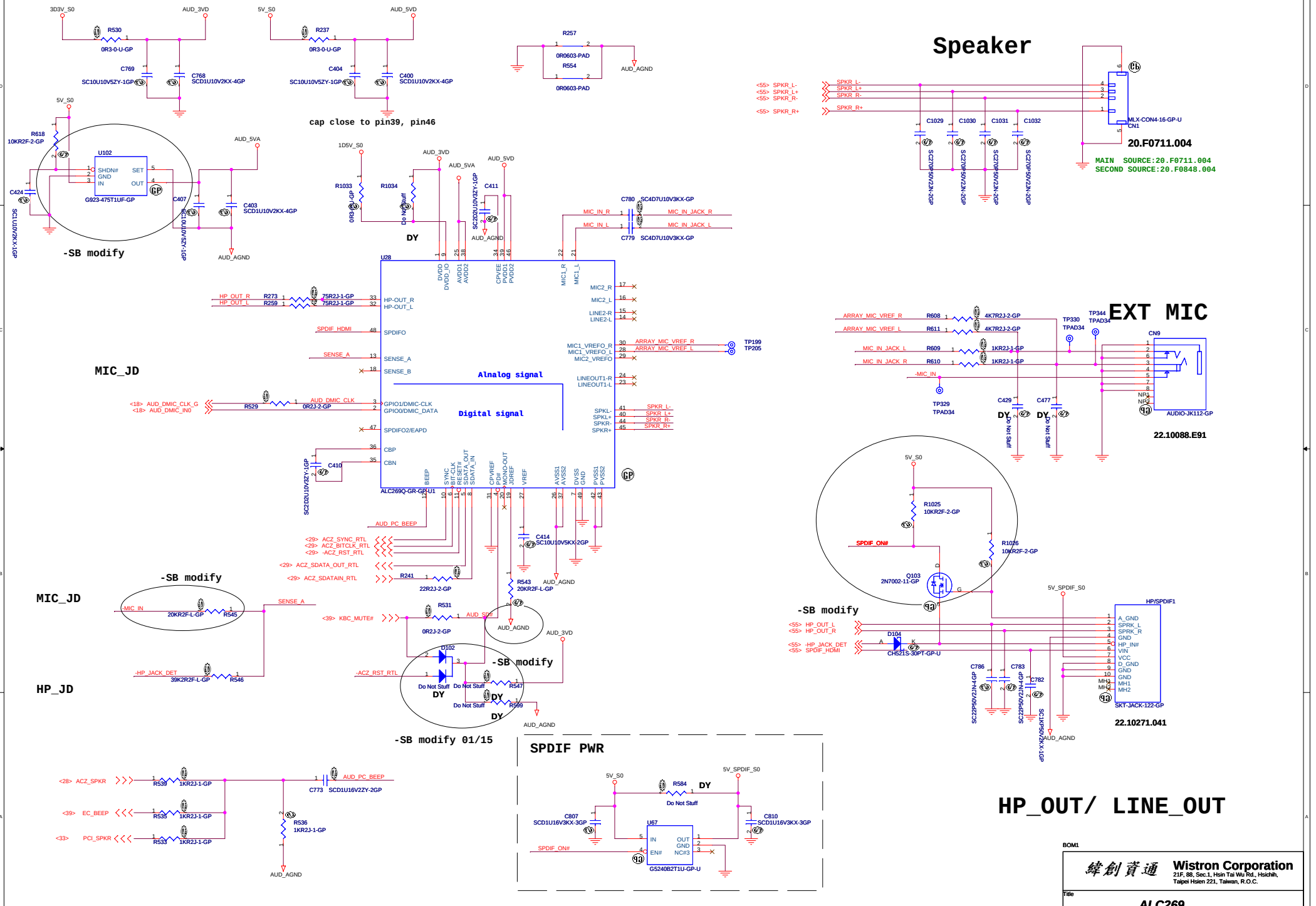
Speaker
EXT MIC
HP_OUT/ LINE_OUT
SPDIF PWR
MIC_JD
HP_JD
-SB modify
-SB modify 01/15
cap close to pin39, pin46
DY
Do Not Stuff
Alnalog signal
Digital signal
20.F0711.004
MAIN SOURCE:20.F0711.004
SECOND SOURCE:20.F0848.004
22.10088.E91
22.10271.041
ALC269Q-GR-GP-U1
U28
U102
G923-475T1UF-GP
U67
G5240B2T1U-GP-U
MLX-CON4-16-GP-U
CN1
CN9
AUDIO-JK112-GP
HP/SPDIF1
SKT-JACK-122-GP
Q103
2N7002-11-GP
D104
CH521S-30PT-GP-U
D102
R257
0R0603-PAD
R554
0R0603-PAD
AUD_AGND
3D3V_S0
AUD_3VD
5V_S0
AUD_5VD
1D5V_S0
AUD_5VA
5V_SPDIF_S0
R530
0R3-0-U-GP
R237
0R3-0-U-GP
C769
SC10U10V5ZY-1GP
C768
SCD1U10V2KX-4GP
C404
SC10U10V5ZY-1GP
C400
SCD1U10V2KX-4GP
R618
10KR2F-2-GP
C424
SCD1U10V2KX-1GP
C407
SC10U10V5ZY-1GP
C403
SCD1U10V2KX-4GP
R1033
0R2J-0-GP
R1034
C411
SC2D2U10V3Y-1GP
C780
SC4D7U10V3KX-GP
C779
SC4D7U10V3KX-GP
MIC_IN_R
MIC_IN_L
MIC_IN_JACK_R
MIC_IN_JACK_L
HP_OUT_R
HP_OUT_L
R273
R259
75R2J-1-GP
SPDIF_HDMI
SENSE_A
SENSE_B
AUD_DMIC_CLK_G
AUD_DMIC_IN0
R529
0R2J-2-GP
AUD_DMIC_CLK
C410
SC2D2U10V3Y-1GP
AUD_PC_BEEP
ACZ_SYNC_RTL
ACZ_BITCLK_RTL
-ACZ_RST_RTL
ACZ_SDATA_OUT_RTL
ACZ_SDATAIN_RTL
R241
22R2J-2-GP
C414
SC10U10V5KX-2GP
R543
20KR2F-L-GP
KBC_MUTE#
R531
0R2J-2-GP
AUD_SIF#
-MIC_IN
20KR2F-L-GP
R545
-HP_JACK_DET
39K2R2F-L-GP
R546
R547
R599
ACZ_SPKR
R539
1KR2J-1-GP
EC_BEEP
R538
PCI_SPKR
R533
C773
SCD1U16V2ZY-2GP
R536
1KR2J-1-GP
R584
C807
SCD1U16V3KX-3GP
C810
SCD1U16V3KX-3GP
SPDIF_ON#
SPKR_L-
SPKR_L+
SPKR_R-
SPKR_R+
C1029
C1030
C1031
C1032
SC270P50V2JN-2GP
ARRAY_MIC_VREF_R
ARRAY_MIC_VREF_L
R608
4K7R2J-2-GP
R611
4K7R2J-2-GP
R609
1KR2J-1-GP
R610
1KR2J-1-GP
TP330
TPAD34
TP344
TPAD34
TP329
TPAD34
TP199
TP205
C429
C477
R1025
10KR2F-2-GP
R1026
10KR2F-2-GP
HP_OUT_L
HP_OUT_R
-HP_JACK_DET
SPDIF_HDMI
C786
C783
C782
SC22P50V2JN-4GP
SC10P50V2KX-1GP
A_GND
SPRK_L
SPRK_R
GND
HP_IN#
VIN
VCC
D_GND
MH1
MH2
BOM1
Wistron Corporation
21F, 88, Sec.1, Hsin Tai Wu Rd., Hsichih,
Taipei Hsien 221, Taiwan, R.O.C.
Title
ALC269
Size
Document Number
LT32M
Rev
-1
Date: Tuesday, May 13, 2008
Sheet 35 of 54

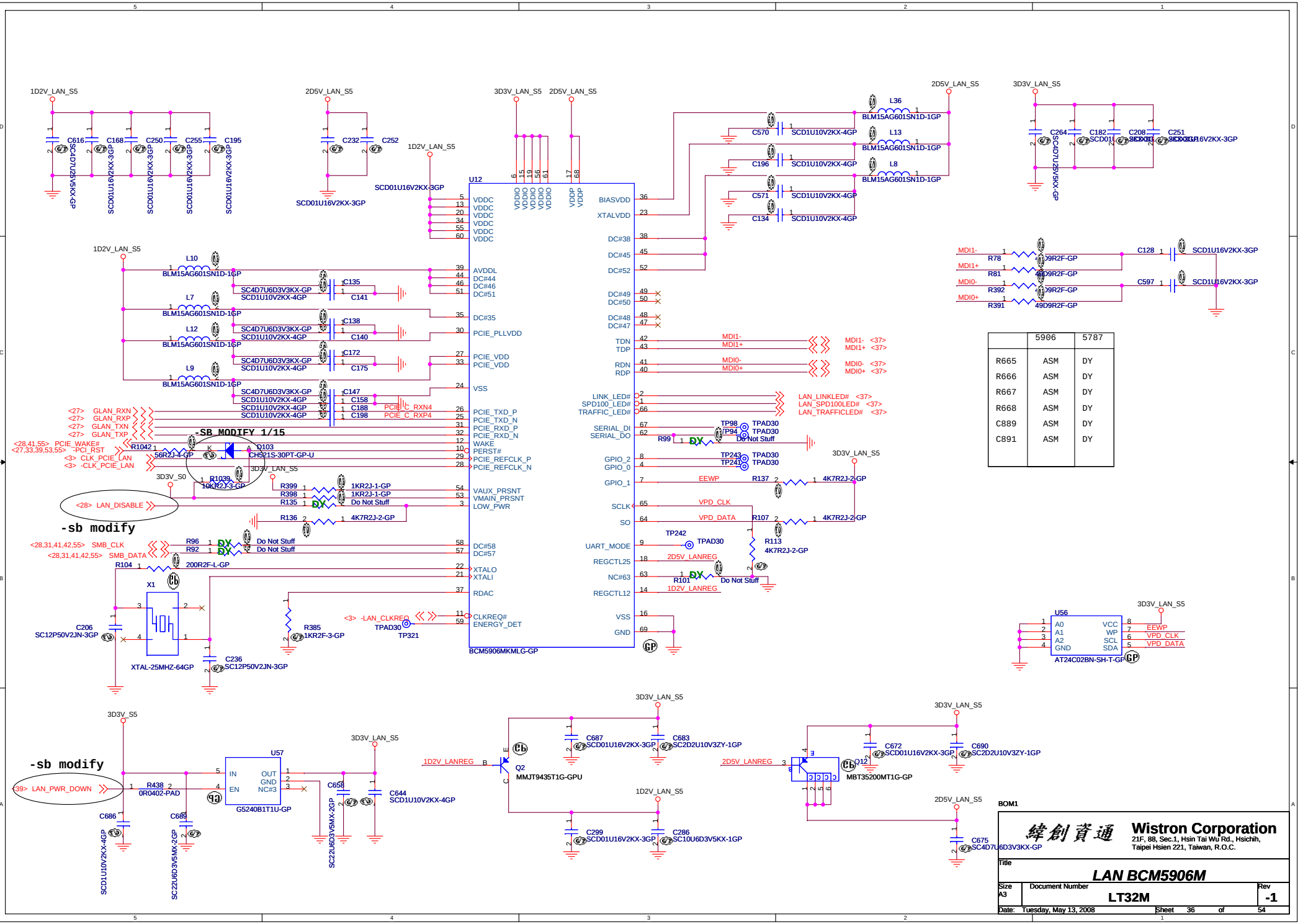


| | 5906 | 5787 |
|---|---|---|
| R665 | ASM | DY |
| R666 | ASM | DY |
| R667 | ASM | DY |
| R668 | ASM | DY |
| C889 | ASM | DY |
| C891 | ASM | DY |

## 10/100M Lan Transformer

1.route on bottom as differential pairs.
2.Tx+/Tx- are pairs. Rx+/Rx- are pairs.
3.No vias, No 90 degree bends.
4.pairs must be equal lengths.
5.6mil trace width,12mil separation.
6.36mil between pairs and any other trace.
7.Must not cross ground moat,except RJ-45 moat.

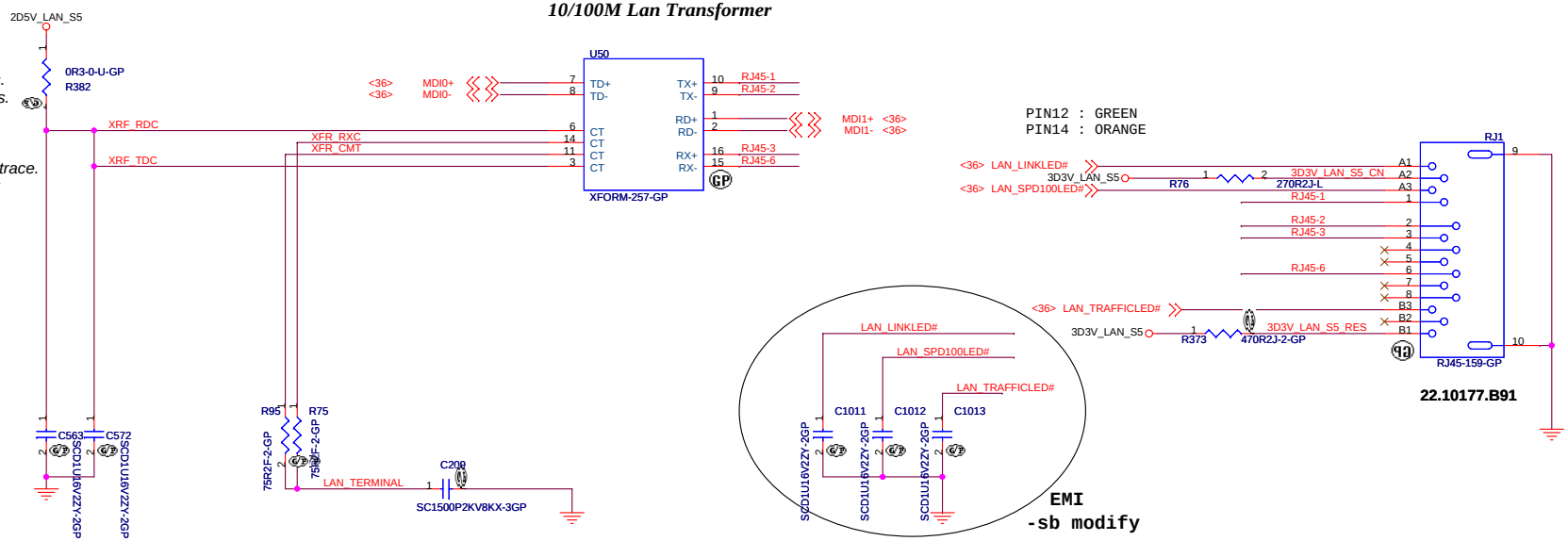


BOM1

| | | |
|---|---|---|
| 緯創資通 | **Wistron Corporation** 21F, 88, Sec.1, Hsin Tai Wu Rd., Hsichih, Taipei Hsien 221, Taiwan, R.O.C. | |
| Title | ***LAN connector/NEW CARD/SIM*** | |
| Size A3 | Document Number **LT32M** | Rev **-1** |
| Date: Tuesday, May 13, 2008 | Sheet 37 of 54 | |

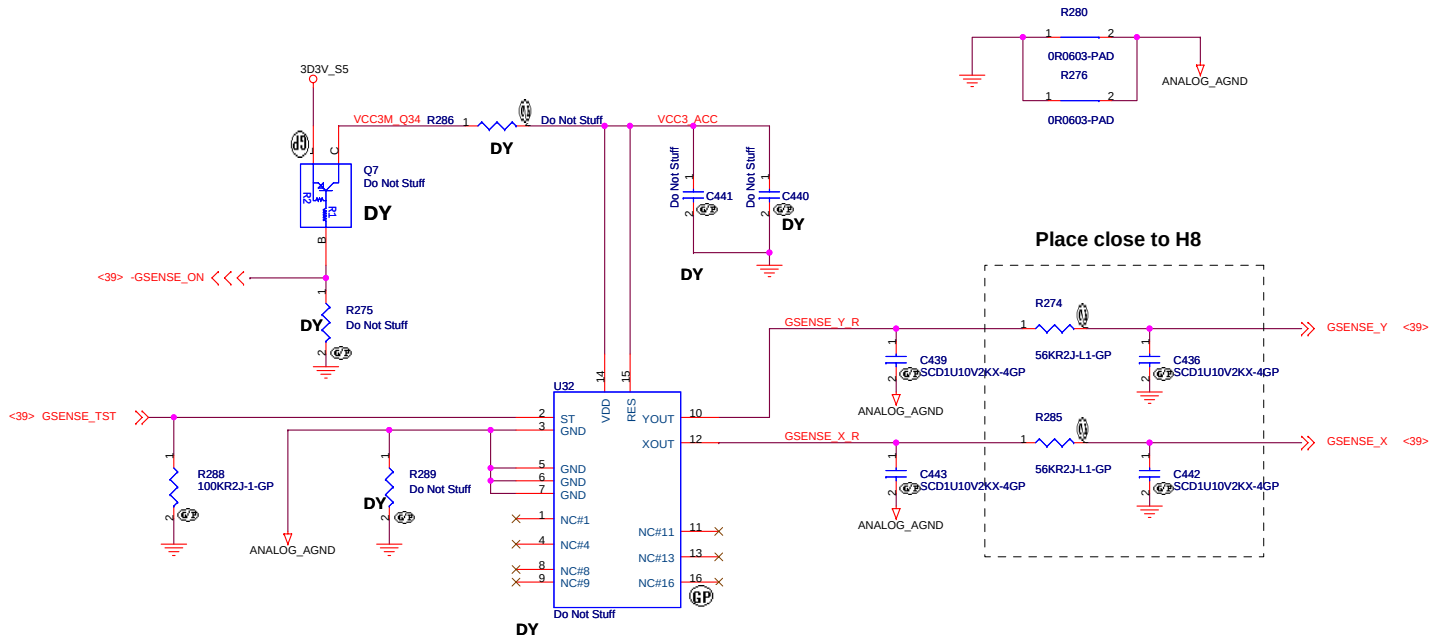


Primary : STMicro LIS244AL
2nd: ADI ADXL322

**Width = 6 mil & Spacing = 10 mil for three Output traces**

| | ADXL322 LIS244AL | No Accel |
|---|---|---|
| R545 | NO_ASM | ASM |
| R547 | ASM | ASM |
| All other | ASM | NO_ASM |

**Layout Comment :**

**(1) Place C439, C443, Q7, R286, R275, C441, C440, R288, R289 close to U32.**

**(2) Avoid routing under DCDC switching area.**

BOM1

緯創資通 **Wistron Corporation**
21F, 88, Sec.1, Hsin Tai Wu Rd., Hsichih, Taipei Hsien 221, Taiwan, R.O.C.

Title: **G-SENSOR**

Size: A3 | Document Number: **LT32M** | Rev: -1

Date: Tuesday, May 13, 2008 | Sheet 38 of 54

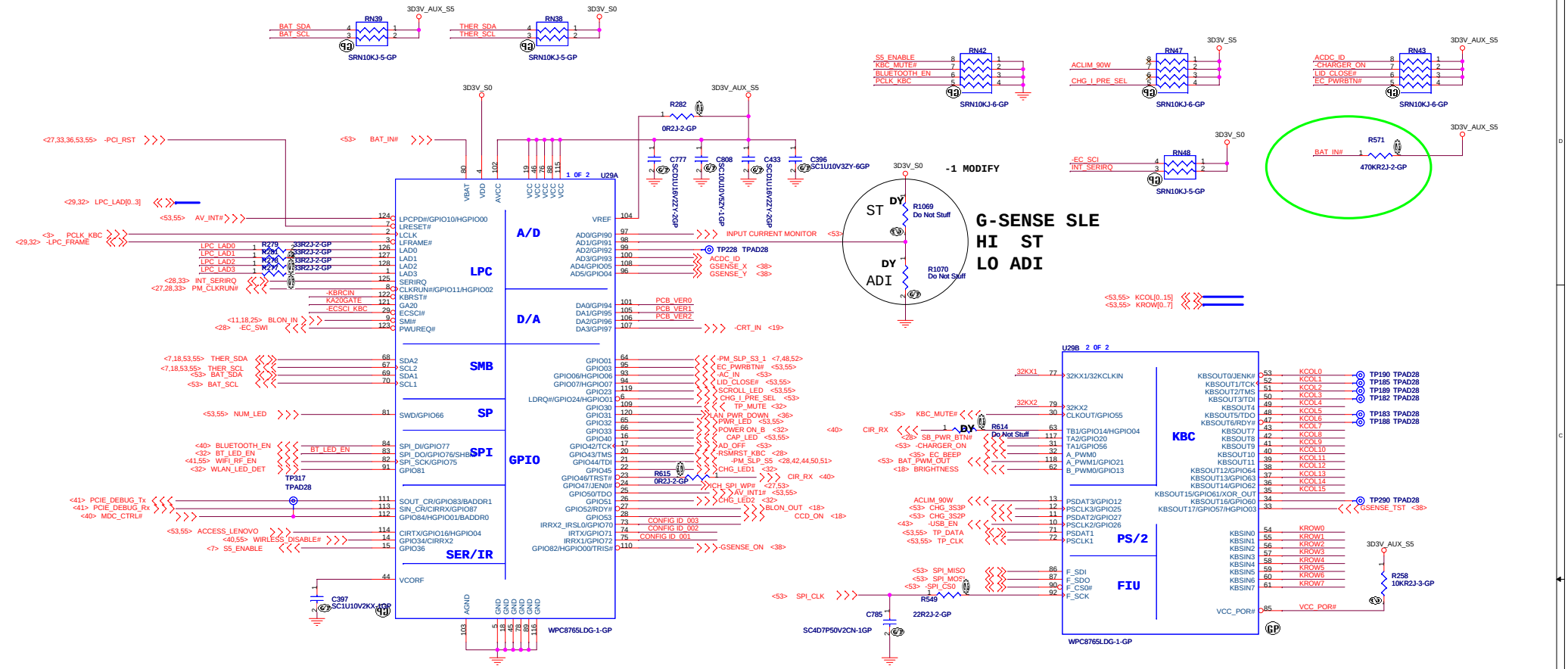


| CONFIG_ID | PIN | 0 | 1 |
|---|---|---|---|
| 001 | GPIO72 | LT32M(DDR2) | LT32P(DDR3) |
| 002 | GPIO71 | UMA | DIS |
| 003 | GPIO70 | | olympus |

PID_LAB1 = 000b ; Lab1

PID_LAB2 = 001b ; Lab2

PID_ENG = 010b ; ENG

PID_PD = 011b ; PD

BOM1

Wistron Corporation
21F, 88, Sec.1, Hsin Tai Wu Rd., Hsichih, Taipei Hsien 221, Taiwan, R.O.C.

Title: KBC WPC8765L

Size: C | Document Number: LT32M | Rev: -1

Date: Tuesday, May 13, 2008 | Sheet 39 of 54

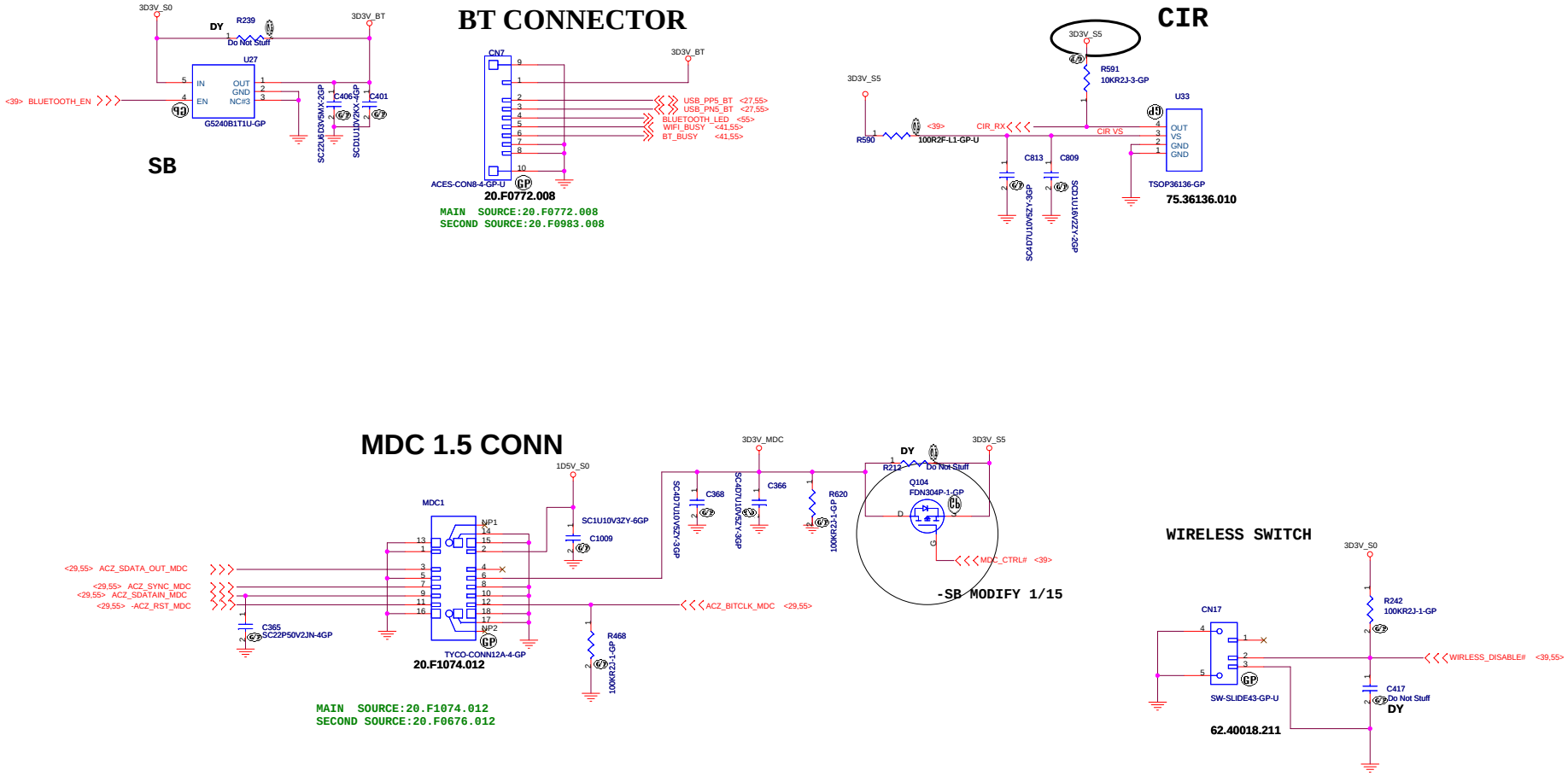


BOM1

| | |
|---|---|
| 緯創資通 | **Wistron Corporation**<br>21F, 88, Sec.1, Hsin Tai Wu Rd., Hsichih,<br>Taipei Hsien 221, Taiwan, R.O.C. |
| Title | ***Module_Blue Tooth/Modem/CIR*** |
| Size / Document Number | **LT32M** / Rev **-1** |
| Date: Tuesday, May 13, 2008 | Sheet 40 of 54 |

# Mini PCI-E Connector

Only port-1 support USB

For Robson

## Port-1 High

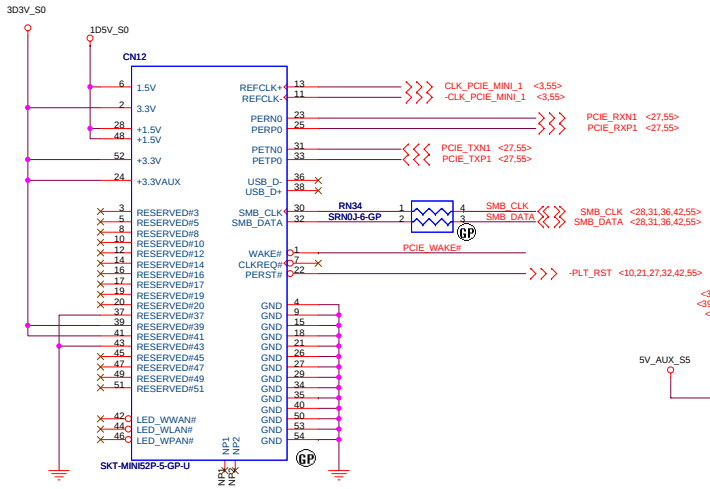


**20.F0832.052**

**MAIN SOURCE:20.F0832.052**

**SECOND SOURCE:20.F1107.052**

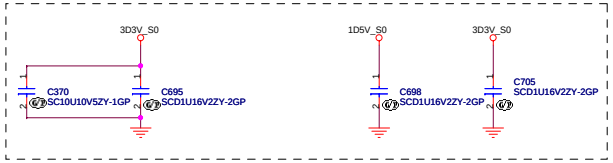


# Mini PCI-E Connector

## Port-2 low

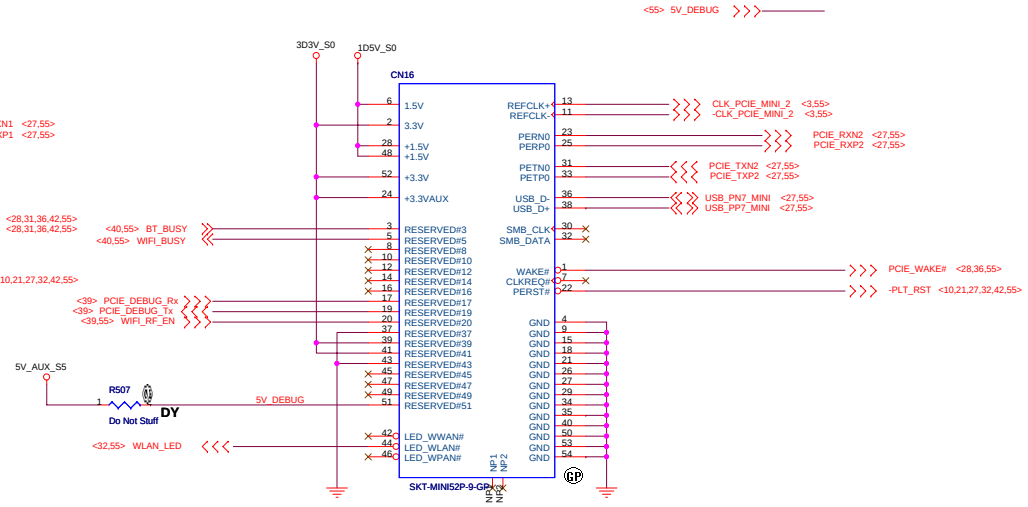


**62.10043.411**

**MAIN SOURCE:62.10043.411**

**SECOND SOURCE:20.F1084.052**

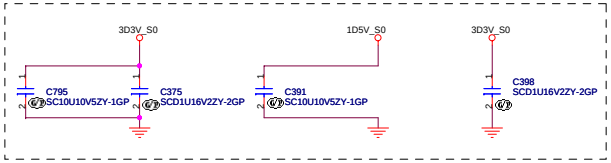


BOM1

緯創資通 **Wistron Corporation**
21F, 88, Sec.1, Hsin Tai Wu Rd., Hsichih,
Taipei Hsien 221, Taiwan, R.O.C.

Title: ***MINI CARD CONN .***

| Size | Document Number | Rev |
|---|---|---|
| C | LT32M | -1 |

Date: Tuesday, May 13, 2008 Sheet 41 of 54

# NEWCARD Connector

For Newcard socket

Place them Near to Chip

Place them Near to Connector

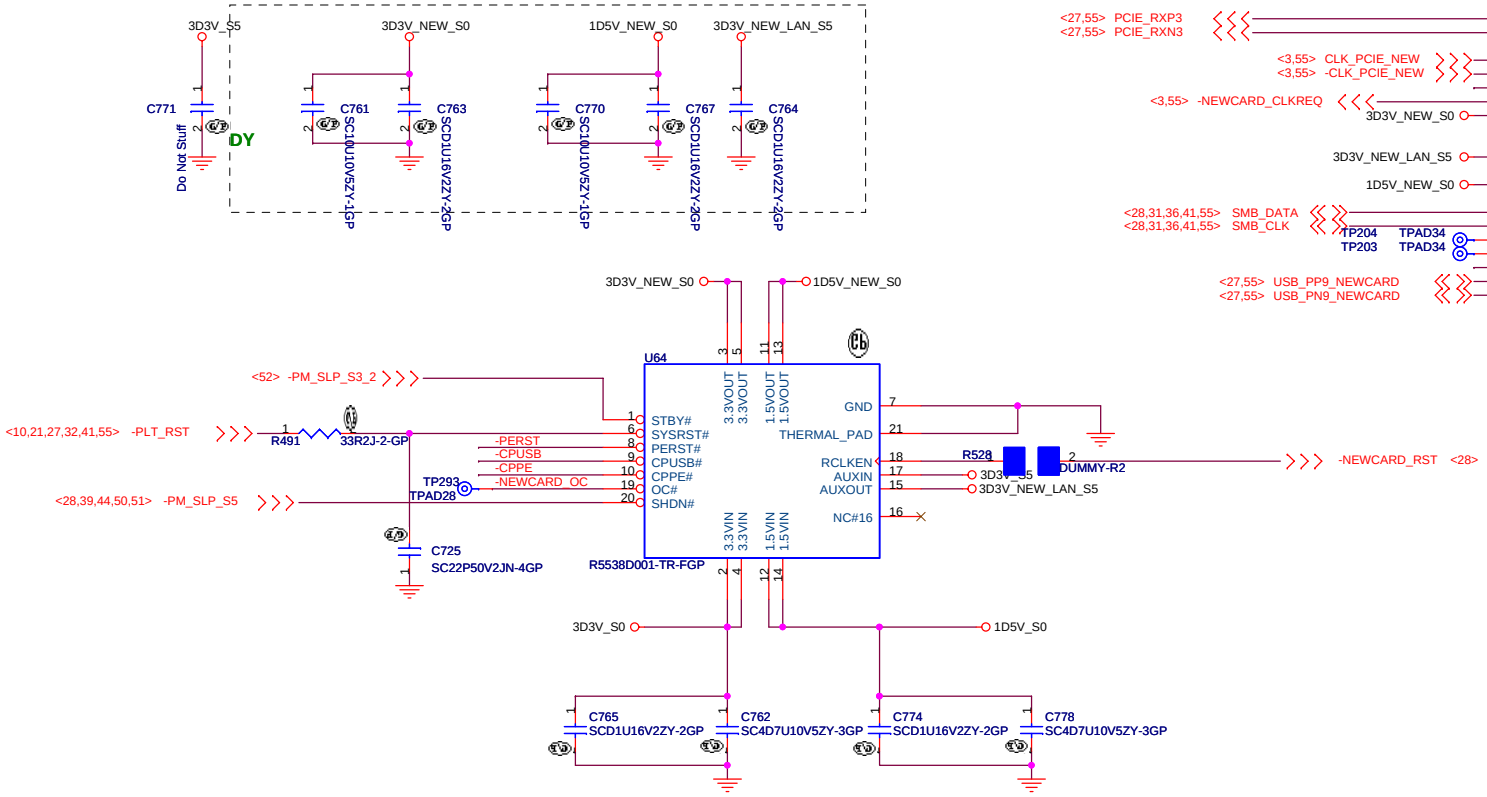


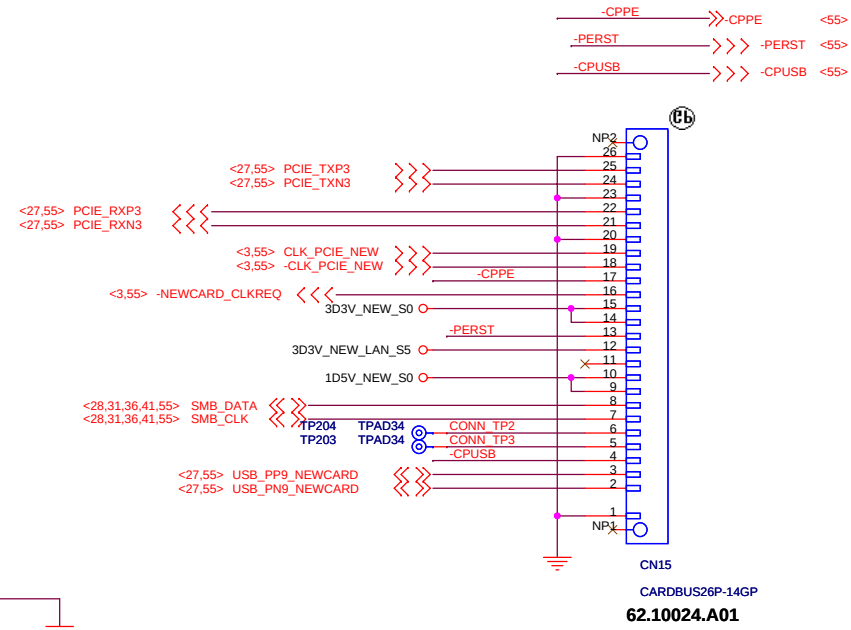


BOM1


緯創資通 Wistron Corporation
21F, 88, Sec.1, Hsin Tai Wu Rd., Hsichih,
Taipei Hsien 221, Taiwan, R.O.C.


| Title | | |
|---|---|---|
| Module_NewCard | | |
| Size | Document Number | Rev |
| | LT32M | -1 |
| Date: Tuesday, May 13, 2008 | Sheet 42 of 54 | |

# Low -End USB BOARD

## 1394

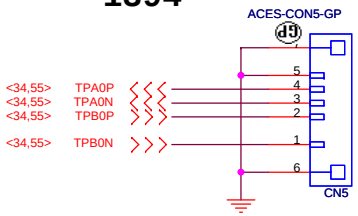


MAIN SOURCE:20.k0196.005
SECOND SOURCE:20.K0212.008

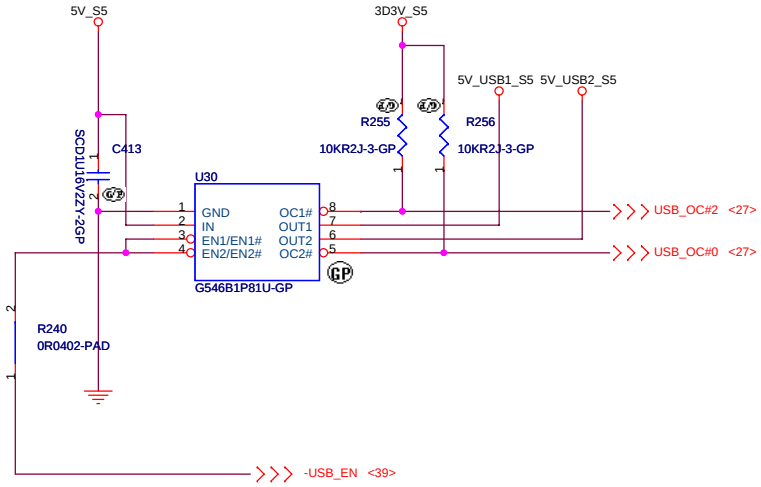


## USB*2

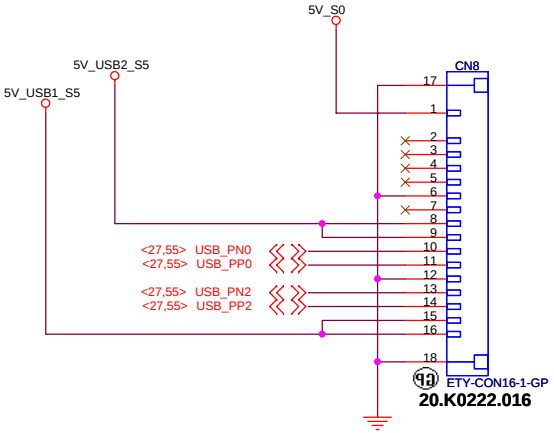


BOM1


緯創資通 Wistron Corporation
21F, 88, Sec.1, Hsin Tai Wu Rd., Hsichih,
Taipei Hsien 221, Taiwan, R.O.C.


Title: *USB I/O & 1394 CNN*

| Size | Document Number | Rev |
|---|---|---|
| B | LT32M | -1 |

Date: Tuesday, May 13, 2008 Sheet 43 of 54

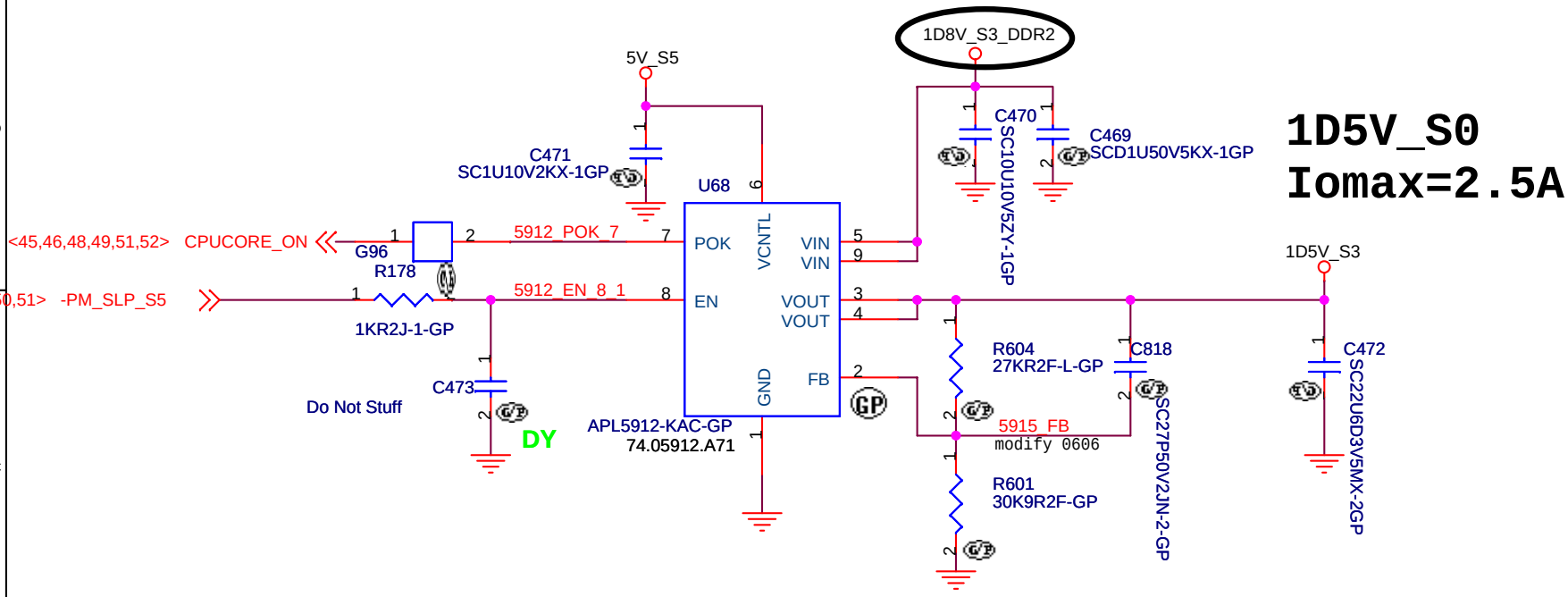


BOM1

| | | |
|---|---|---|
| 緯創資通 | **Wistron Corporation**<br>21F, 88, Sec.1, Hsin Tai Wu Rd., Hsichih,<br>Taipei Hsien 221, Taiwan, R.O.C. | |
| Title | ***1D5V_S0*** | |
| Size | Document Number<br>**Olympus** | Rev<br>-1 |
| Date: Tuesday, May 13, 2008 | Sheet 44 of 55 | |

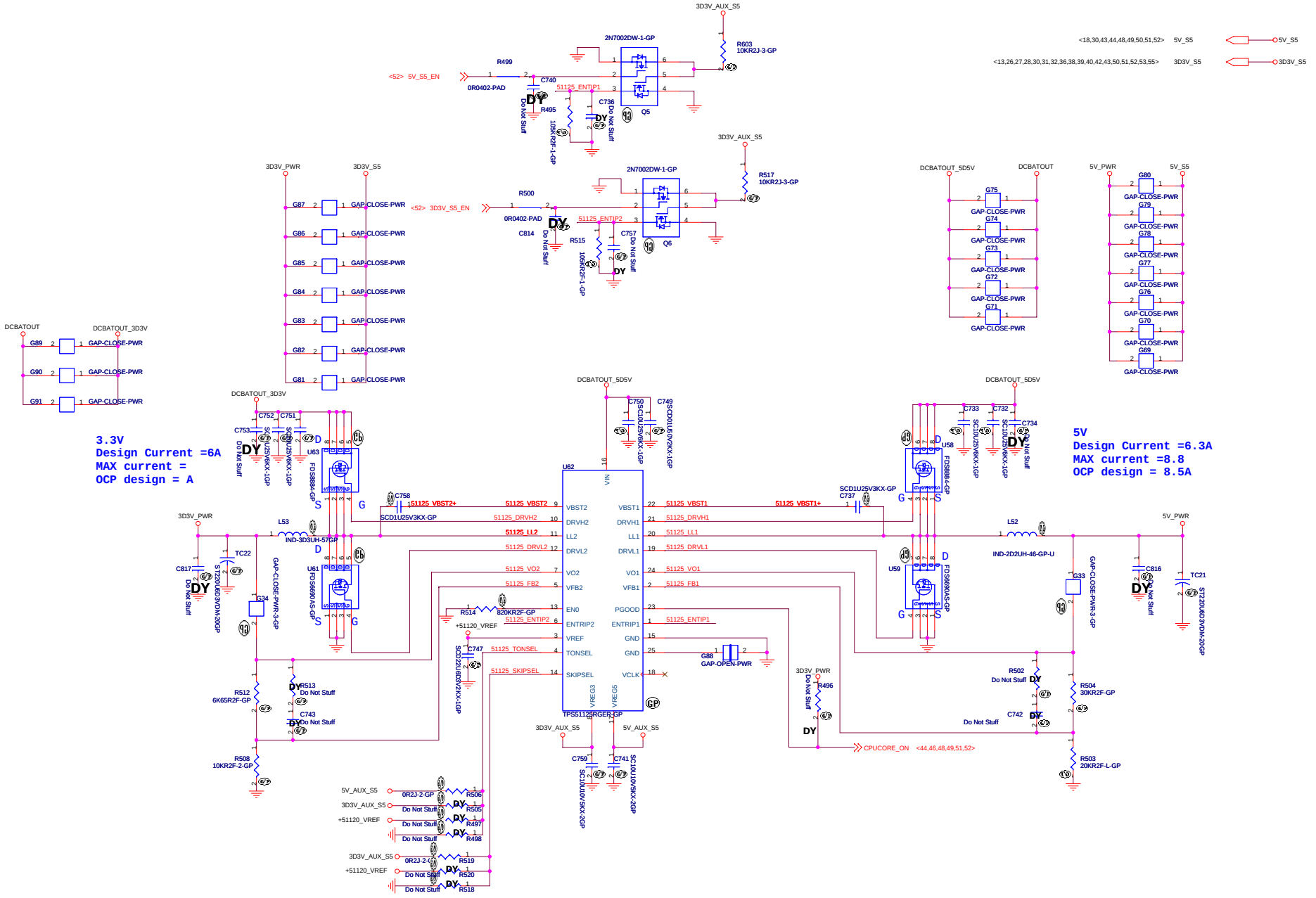


BOM1

| | | |
|---|---|---|
| 緯創資通 | **Wistron Corporation** 21F, 88, Sec.1, Hsin Tai Wu Rd., Hsichih, Taipei Hsien 221, Taiwan, R.O.C. | |
| Title | ***DCDC 5V/3D3V (TPS51125)*** | |
| Size | Document Number **Olympus** | Rev -1 |
| Date: Tuesday, May 13, 2008 | Sheet 45 of 53 | |

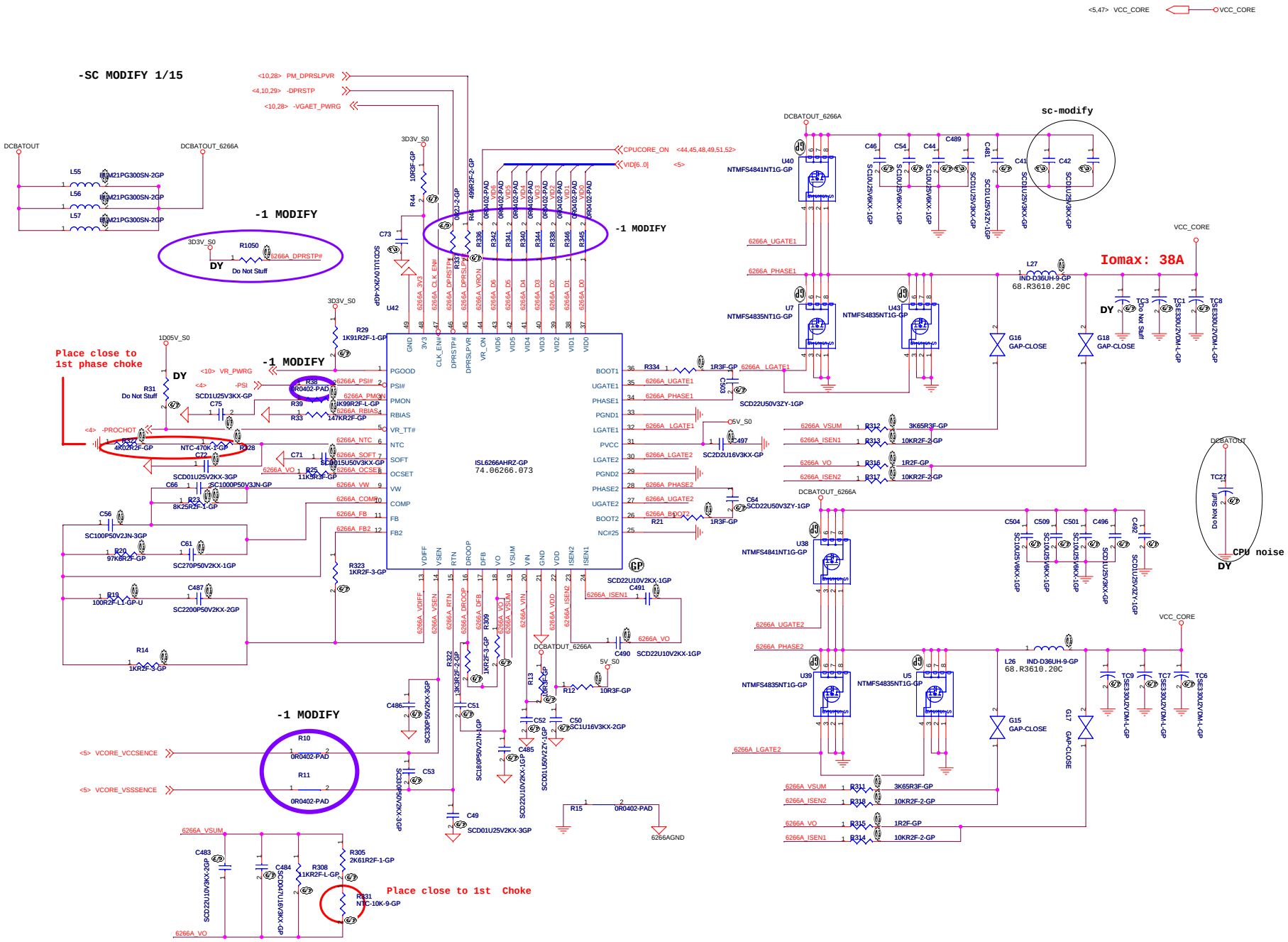


BOM1

| | | |
|---|---|---|
| 緯創資通 | Wistron Corporation<br>21F, 88, Sec.1, Hsin Tai Wu Rd., Hsichih,<br>Taipei Hsien 221, Taiwan, R.O.C. | |
| Title | ISL6266A_CPU_CORE | |
| Size | Document Number: LT32M | Rev: -1 |
| Date: Tuesday, May 13, 2008 | Sheet 46 of 55 | |

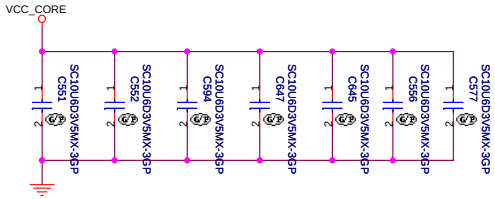


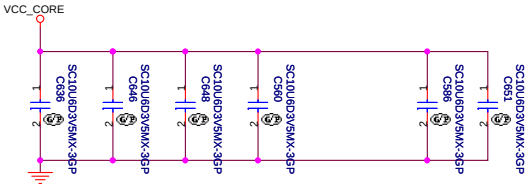


**10UF 6.3V X5R 2125 1/16W X16 PCS**

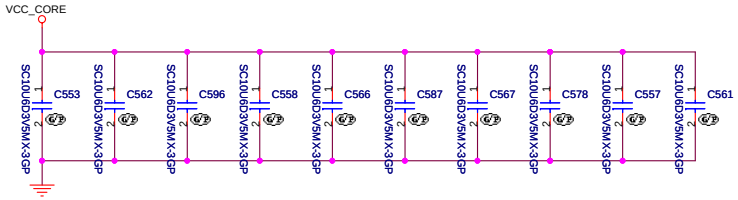


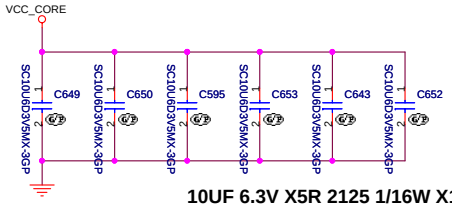


**10UF 6.3V X5R 2125 1/16W X16 PCS**

BOM1

緯創資通 **Wistron Corporation**
21F, 88, Sec.1, Hsin Tai Wu Rd., Hsichih,
Taipei Hsien 221, Taiwan, R.O.C.

| | | |
|---|---|---|
| Title | ***VCCCPUCORE DECOUPLING*** | |
| Size: Custom | Document Number: **LT32M** | Rev: **-1** |
| Date: Tuesday, May 13, 2008 | Sheet 47 of 55 | |

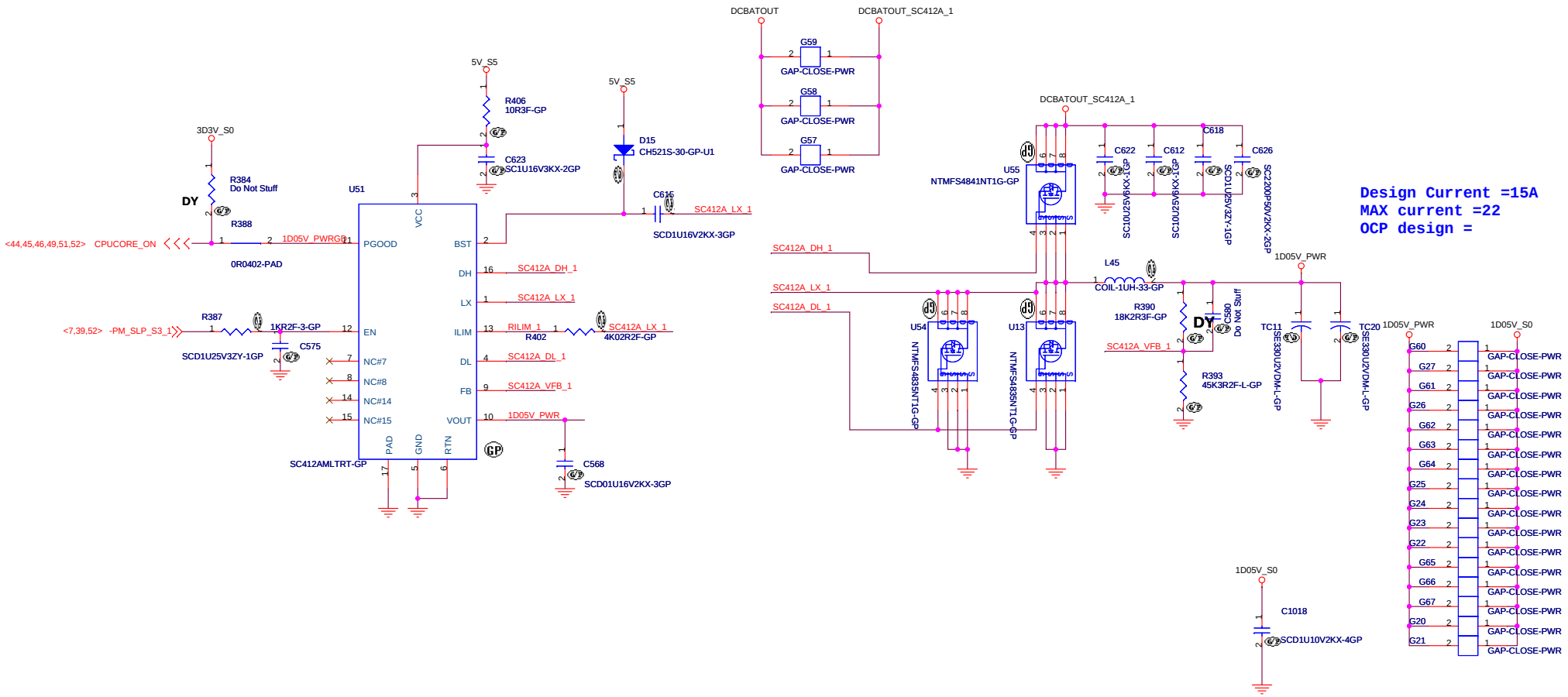


**Design Current =15A**
**MAX current =22**
**OCP design =**

BOM1

| | | |
|---|---|---|
| 緯創資通 | **Wistron Corporation**<br>21F, 88, Sec.1, Hsin Tai Wu Rd., Hsichih,<br>Taipei Hsien 221, Taiwan, R.O.C. | |
| Title | ***SC412A +1.05VM*** | |
| Size A3 | Document Number **LT32M** | Rev **-1** |
| Date: Tuesday, May 13, 2008 | Sheet 48 of 55 | |

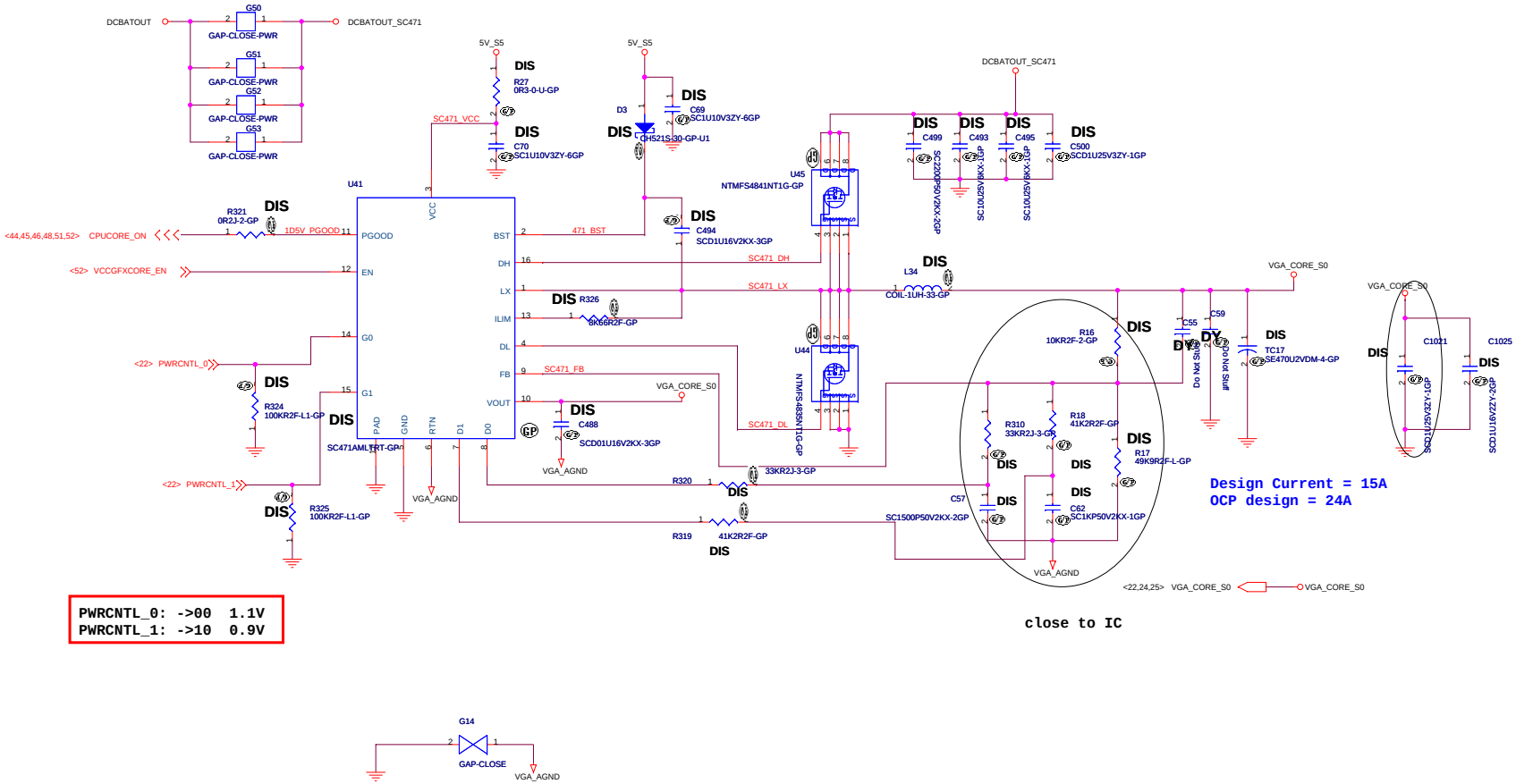


| | |
|---|---|
| PWRCNTL_0: ->00 | 1.1V |
| PWRCNTL_1: ->10 | 0.9V |

BOM1

| | | |
|---|---|---|
| 緯創資通 | Wistron Corporation<br>21F, 88, Sec.1, Hsin Tai Wu Rd., Hsichih,<br>Taipei Hsien 221, Taiwan, R.O.C. | |
| Title | SC471A VGA CORE | |
| Size C | Document Number LT32M | Rev -1 |
| Date: Tuesday, May 13, 2008 | Sheet 49 of 55 | |

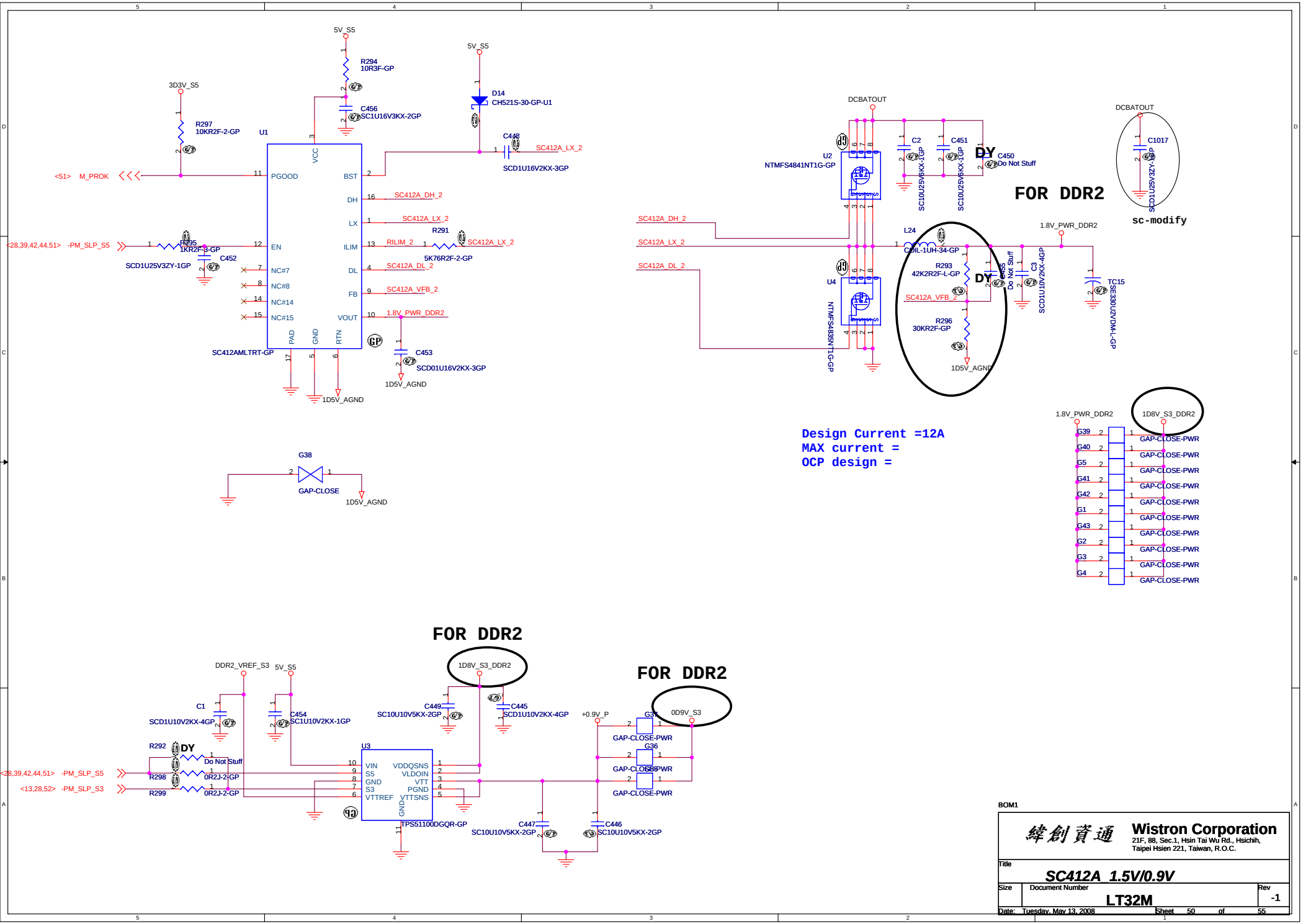


BOM1

| | | |
|---|---|---|
| 緯創資通 | **Wistron Corporation**<br>21F, 88, Sec.1, Hsin Tai Wu Rd., Hsichih,<br>Taipei Hsien 221, Taiwan, R.O.C. | |
| Title | ***SC412A_1.5V/0.9V*** | |
| Size | Document Number<br>**LT32M** | Rev<br>-1 |
| Date: Tuesday, May 13, 2008 | Sheet 50 of 55 | |

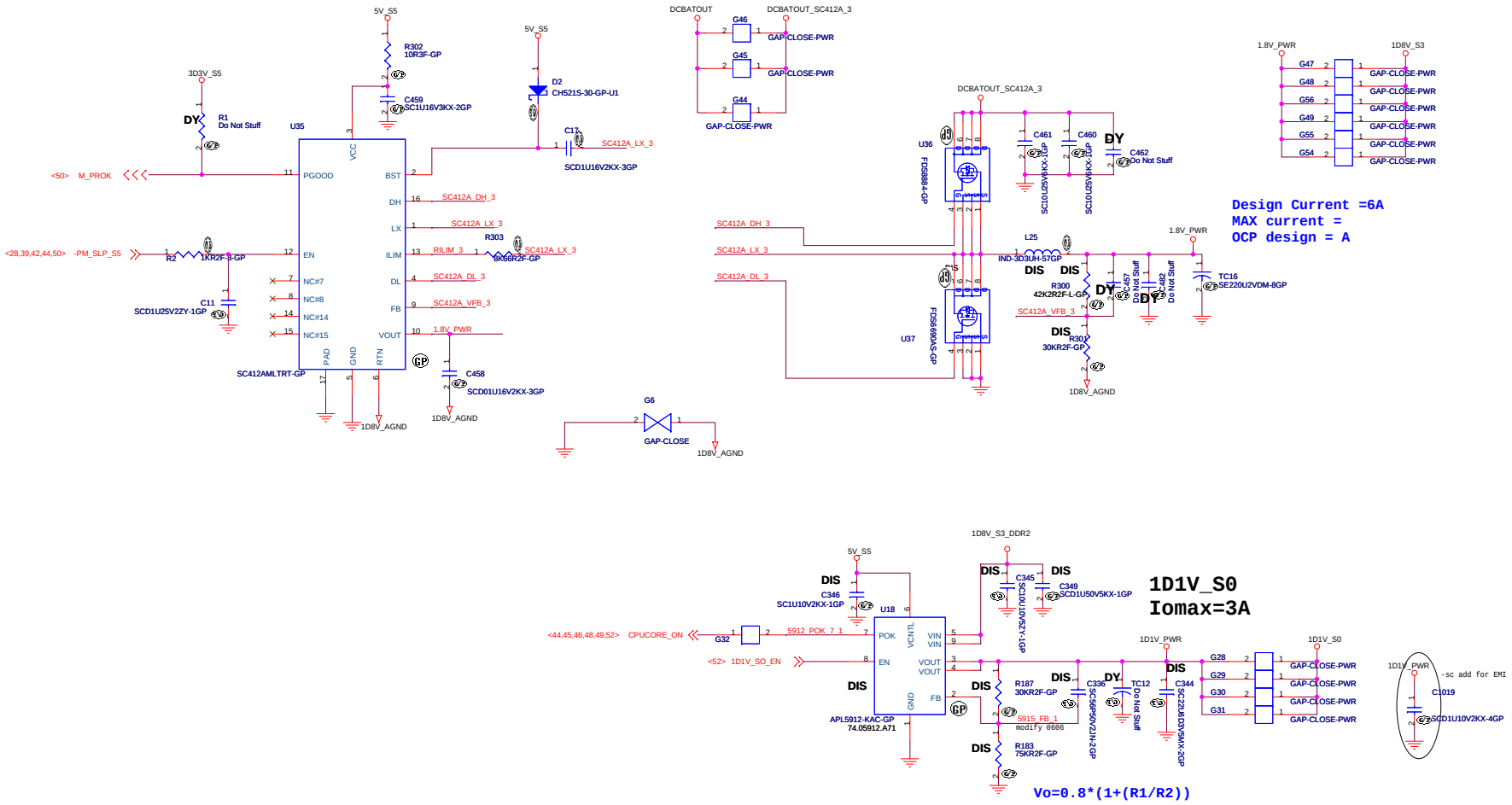


BOM1

| | | |
|---|---|---|
| 緯創資通 | **Wistron Corporation** 21F, 88, Sec.1, Hsin Tai Wu Rd., Hsichih, Taipei Hsien 221, Taiwan, R.O.C. | |
| Title | ***SC412A_1.8V/1.1V*** | |
| Size | Document Number **LT32M** | Rev -1 |
| Date: Tuesday, May 13, 2008 | Sheet 51 of 55 | |

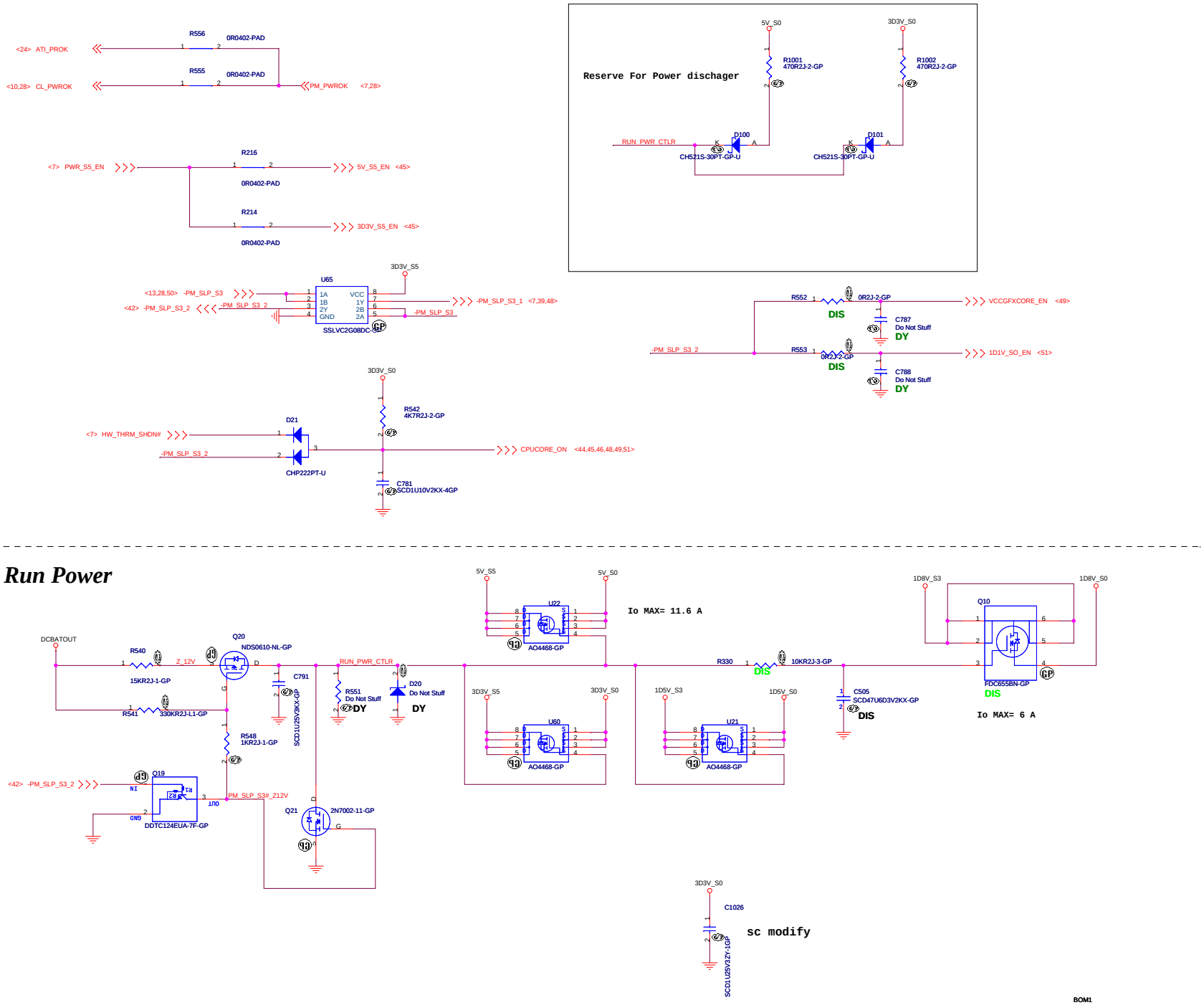


BOM1

| | | |
|---|---|---|
| 緯創資通 | Wistron Corporation<br>21F, 88, Sec.1, Hsin Tai Wu Rd., Hsichih,<br>Taipei Hsien 221, Taiwan, R.O.C. | |
| Title | PWRPLANE&RESET LOGIC | |
| Size | Document Number: LT32M | Rev: -1 |
| Date: Tuesday, May 13, 2008 | Sheet 52 of 55 | |

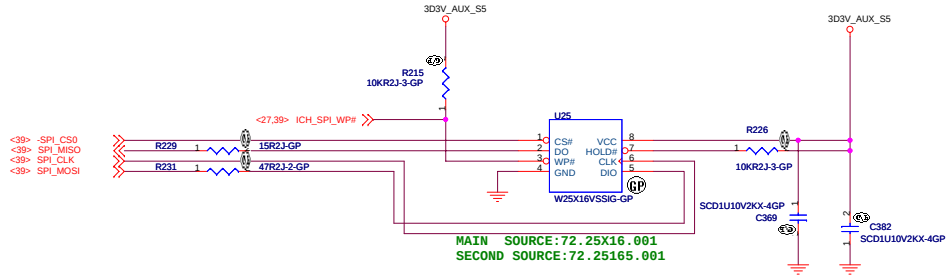


# SPI FLASH

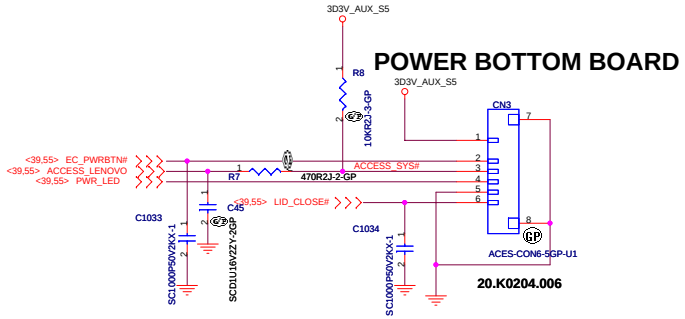


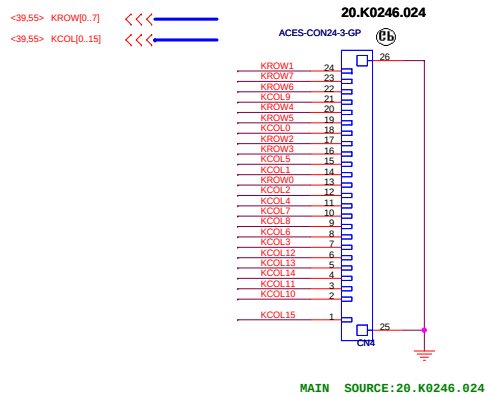


# KEYBORD CONNECTOR

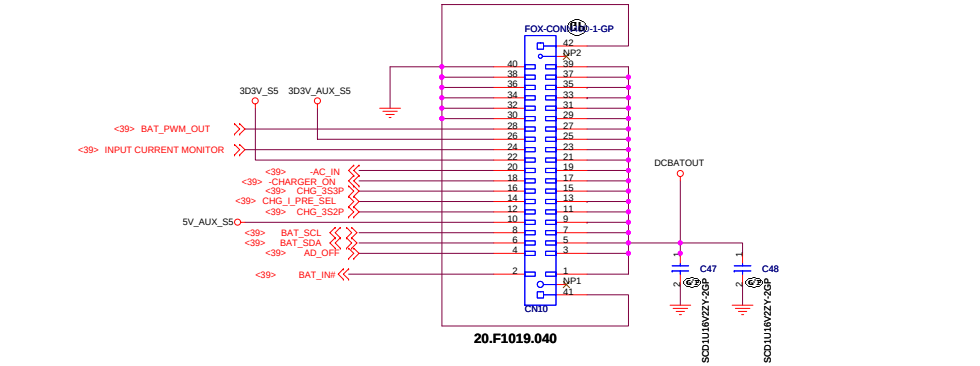


# CHARGER CONNECTOR

# AV Panel

TouchPad Connector

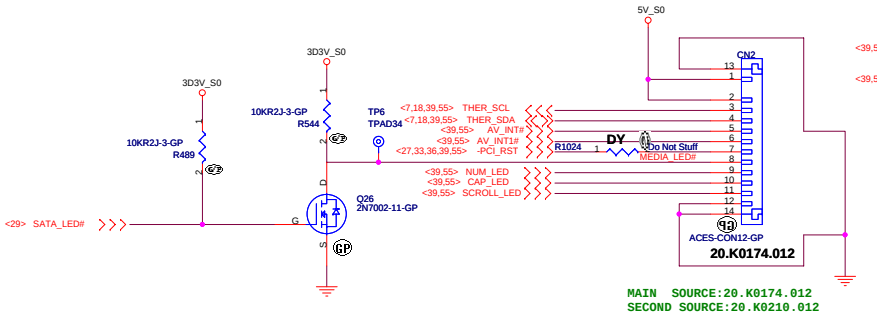


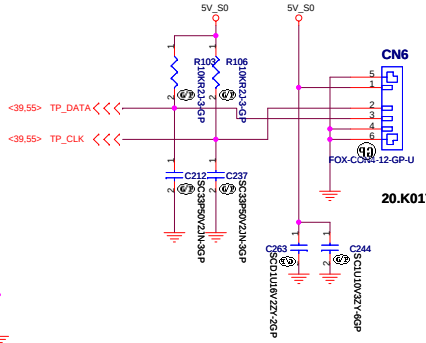


BOM1

| | | |
|---|---|---|
| 緯創資通 | Wistron Corporation<br>21F, 88, Sec.1, Hsin Tai Wu Rd., Hsichih,<br>Taipei Hsien 221, Taiwan, R.O.C. | |
| Title | KB/TP/SPI/AV/Charger | |
| Size | Document Number: LT32M | Rev: -1 |
| Date: Tuesday, May 13, 2008 | Sheet 53 of 55 | |

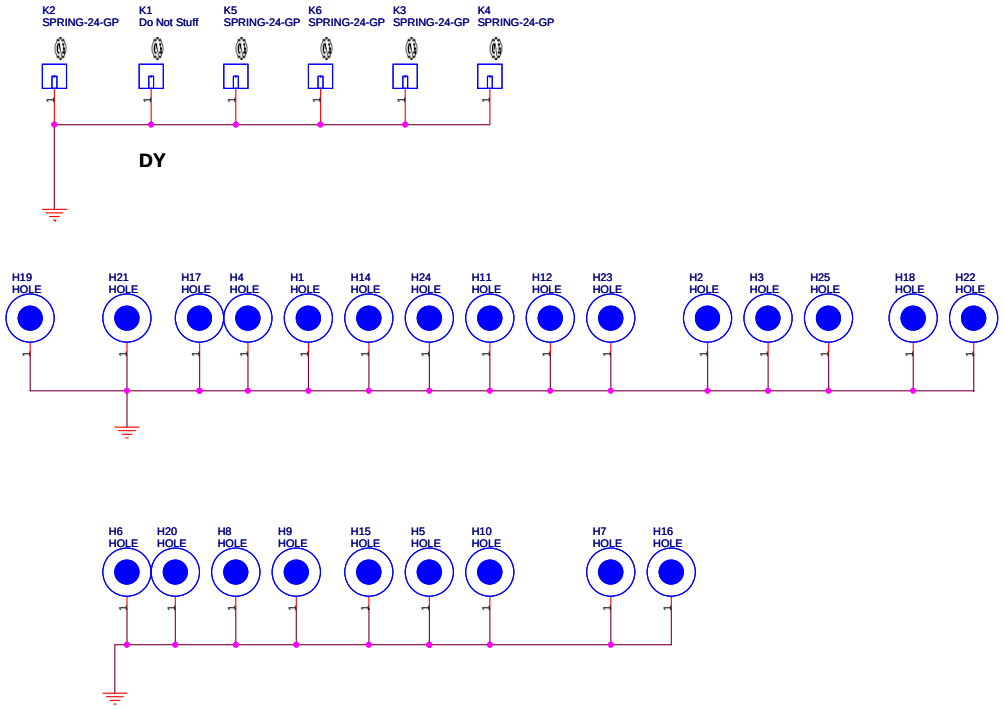


BOM1

緯創資通 **Wistron Corporation**
21F, 88, Sec.1, Hsin Tai Wu Rd., Hsichih,
Taipei Hsien 221, Taiwan, R.O.C.

Title: ***PTH FOR SCREW HOLES***

| Size | Document Number | Rev |
|---|---|---|
| Custom | LT32M | -1 |

Date: Tuesday, May 13, 2008 Sheet 54 of 55

## Near CN13 KB

<39,53> KROW[0..7]
<39,53> KCOL[0..15]

| | | |
|---|---|---|
| KROW0 | TPAD34 | TP46 |
| KROW1 | TPAD34 | TP45 |
| KROW2 | TPAD34 | TP19 |
| KROW3 | TPAD34 | TP24 |
| KROW4 | TPAD34 | TP43 |
| KROW5 | TPAD34 | TP25 |
| KROW6 | TPAD34 | TP47 |
| KROW7 | TPAD34 | TP33 |
| KCOL0 | TPAD34 | TP42 |
| KCOL1 | TPAD34 | TP22 |
| KCOL2 | TPAD34 | TP27 |
| KCOL3 | TPAD34 | TP37 |
| KCOL4 | TPAD34 | TP44 |
| KCOL5 | TPAD34 | TP35 |
| KCOL6 | TPAD34 | TP29 |
| KCOL7 | TPAD34 | TP26 |
| KCOL8 | TPAD34 | TP40 |
| KCOL9 | TPAD34 | TP28 |
| KCOL10 | TPAD34 | TP30 |
| KCOL11 | TPAD34 | TP38 |
| KCOL12 | TPAD34 | TP31 |
| KCOL13 | TPAD34 | TP41 |
| KCOL14 | TPAD34 | TP32 |
| KCOL15 | TPAD34 | TP39 |

## Near CN3 POWER BOOTOM BOARD

| | | |
|---|---|---|
| 3D3V_AUX_S5 | TPAD34 | TP36 |
| <39,53> EC_PWRBTN# | TPAD34 | TP34 |
| <39,53> ACCESS_LENOVO | TPAD34 | TP20 |
| <39,53> PWR_LED | TPAD34 | TP21 |
| | TPAD34 | TP49 |
| <39,53> LID_CLOSE# | TPAD34 | TP105 |

## Near CN18 AV PANEL

| | | |
|---|---|---|
| 5V_S0 | TPAD34 | TP14 |
| <7,18,39,53> THER_SCL | TPAD34 | TP17 |
| <7,18,39,53> THER_SDA | TPAD34 | TP13 |
| <39,53> AV_INT# | TPAD34 | TP11 |
| <39,53> AV_INT1# | TPAD34 | TP8 |
| <27,33,36,39,53> -PCI_RST | TPAD34 | TP10 |
| <39,53> NUM_LED | TPAD34 | TP7 |
| <39,53> CAP_LED | TPAD34 | TP9 |
| <39,53> SCROLL_LED | TPAD34 | TP12 |
| | TPAD34 | TP5 |

## Near CN20 TP

| | | |
|---|---|---|
| 5V_S0 | TPAD34 | TP118 |
| <39,53> TP_DATA | TPAD34 | TP127 |
| <39,53> TP_CLK | TPAD34 | TP131 |
| | TPAD34 | TP92 |

## Near CN8 USB

| | | |
|---|---|---|
| 5V_USB2_S5 | TPAD34 | TP50 |
| <27,43> USB_PN0 | TPAD34 | TP51 |
| <27,43> USB_PP0 | TPAD34 | TP52 |
| <27,43> USB_PN2 | TPAD34 | TP227 |
| <27,43> USB_PP2 | TPAD34 | TP223 |
| 5V_USB1_S5 | TPAD34 | TP53 |
| | TPAD34 | TP54 |

## Near CN16 1394

| | | |
|---|---|---|
| <34,43> TPA0P | TPAD34 | TP55 |
| <34,43> TPA0N | TPAD34 | TP56 |
| <34,43> TPB0P | TPAD34 | TP60 |
| <34,43> TPB0N | TPAD34 | TP75 |

## Near CAMERA1

| | | |
|---|---|---|
| CCD_PWR_RES | TPAD34 | TP48 |
| <18,27> USB_PN8_CCD | TPAD34 | TP57 |
| <18,27> USB_PP8_CCD | TPAD34 | TP59 |
| <18> AUD_DMIC_CLK_G_R | TPAD34 | TP58 |
| <18> AUD_DMIC_IN0_R | TPAD34 | TP61 |
| | TPAD34 | TP62 |

## Near CN6 MINI PORT-1

| | | |
|---|---|---|
| 1D5V_S0 | TPAD34 | TP254 |
| 3D3V_S0 | TPAD34 | TP248 |
| 3D3V_S5 | TPAD34 | TP257 |
| <3,41> CLK_PCIE_MINI_1 | TPAD34 | TP150 |
| <3,41> -CLK_PCIE_MINI_1 | TPAD34 | TP144 |
| <27,41> PCIE_RXN1 | TPAD34 | TP78 |
| <27,41> PCIE_RXP1 | TPAD34 | TP81 |
| <27,41> PCIE_TXN1 | TPAD34 | TP101 |
| <27,41> PCIE_TXP1 | TPAD34 | TP103 |
| <27,41> USB_PN7_MINI | TPAD34 | TP255 |
| <27,41> USB_PP7_MINI | TPAD34 | TP256 |
| <28,31,36,41,42> SMB_CLK | TPAD34 | TP252 |
| <28,31,36,41,42> SMB_DATA | TPAD34 | TP253 |
| <28,36,41> PCIE_WAKE# | TPAD34 | TP271 |
| <10,21,27,32,41,42> -PLT_RST | TPAD34 | TP141 |
| | TPAD34 | TP250 |

## Near CN7 MINI PORT-2

| | | |
|---|---|---|
| 1D5V_S0 | TPAD34 | TP306 |
| 3D3V_S0 | TPAD34 | TP295 |
| 3D3V_S5 | TPAD34 | TP104 |
| <40,41> WIFI_BUSY | TPAD34 | TP303 |
| <39,41> WIFI_RF_EN | TPAD34 | TP110 |
| <41> 5V_DEBUG | TPAD34 | TP273 |
| <32,41> WLAN_LED | TPAD34 | TP324 |
| <3,41> CLK_PCIE_MINI_2 | TPAD34 | TP111 |
| <3,41> -CLK_PCIE_MINI_2 | TPAD34 | TP194 |
| <27,41> PCIE_RXN2 | TPAD34 | TP112 |
| <27,41> PCIE_RXP2 | TPAD34 | TP113 |
| <27,41> PCIE_TXN2 | TPAD34 | TP176 |
| <27,41> PCIE_TXP2 | TPAD34 | TP173 |
| <28,36,41> PCIE_WAKE# | TPAD34 | TP115 |
| <10,21,27,32,41,42> -PLT_RST | TPAD34 | TP283 |

## Near CN12 BT

| | | |
|---|---|---|
| 3D3V_BT | TPAD34 | TP177 |
| <27,40> USB_PP5_BT | TPAD34 | TP180 |
| <27,40> USB_PN5_BT | TPAD34 | TP171 |
| <40> BLUETOOTH_LED | TPAD34 | TP184 |
| <40,41> WIFI_BUSY | TPAD34 | TP175 |
| <40,41> BT_BUSY | TPAD34 | TP181 |
| | TPAD34 | TP179 |

## Near MDC1 MDC

| | | |
|---|---|---|
| 3D3V_S5 | TPAD34 | TP264 |
| <29,40> ACZ_SDATA_OUT_MDC | TPAD34 | TP259 |
| <29,40> ACZ_SYNC_MDC | TPAD34 | TP258 |
| <29,40> ACZ_SDATAIN_MDC | TPAD34 | TP145 |
| <29,40> -ACZ_RST_MDC | TPAD34 | TP142 |
| <29,40> ACZ_BITCLK_MDC | TPAD34 | TP149 |
| | TPAD34 | TP143 |

## Near CN26 WLAN SW

| | | |
|---|---|---|
| <39,40> WIRELESS_DISABLE# | TPAD34 | TP116 |
| | TPAD34 | TP233 |

## Near CN25 SPEAKER

| | | | |
|---|---|---|---|
| <35> SPKR_L- | SPKR_L- | TPAD34 | TP1 |
| <35> SPKR_L+ | SPKR_L+ | TPAD34 | TP2 |
| <35> SPKR_R- | SPKR_R- | TPAD34 | TP3 |
| <35> SPKR_R+ | SPKR_R+ | TPAD34 | TP4 |

## Near HP/SPDIF1

| | | |
|---|---|---|
| 5V_SPDIF_S0 | TPAD34 | TP218 |
| <35> SPDIF_HDMI | TPAD34 | TP215 |
| <35> HP_OUT_L | TPAD34 | TP216 |
| <35> HP_OUT_R | TPAD34 | TP121 |
| AUD_AGND | TPAD34 | TP220 |
| <35> -HP_JACK_DET | TPAD34 | TP219 |
| | TPAD34 | TP234 |

## Near CARD1

| | | |
|---|---|---|
| 3D3V_CARD | TPAD34 | TP313 |
| <34> SD/XD/MS_DATA1_1 | TPAD34 | TP302 |
| <34> SD/XD/MS_DATA0_1 | TPAD34 | TP305 |
| <34> SD/XD/MS_DATA2_1 | TPAD34 | TP316 |
| <34> SD/XD/MS_DATA3_1 | TPAD34 | TP307 |
| <34> XD_DATA4_1 | TPAD34 | TP315 |
| <34> XD_DATA5_1 | TPAD34 | TP296 |
| <34> XD_DATA6_1 | TPAD34 | TP314 |
| <34> XD_DATA7_1 | TPAD34 | TP310 |
| <34> XD_CD# | TPAD34 | TP157 |
| <34> SD_WP#(XDR/B#) | TPAD34 | TP162 |
| <34> SD/XD/MS_CLK_1 | TPAD34 | TP158 |
| <34> XD_CE# | TPAD34 | TP292 |
| <34> XD_CLE | TPAD34 | TP156 |
| <34> XD_ALE | TPAD34 | TP161 |
| <34> SD/XD/MS_CMD_1 | TPAD34 | TP163 |
| <34> MS_INS# | TPAD34 | TP159 |
| <34> SD_CD# | TPAD34 | TP167 |
| <34> XD_WP# | TPAD34 | TP160 |
| | TPAD34 | TP318 |

## Near SATA1

| | | |
|---|---|---|
| 5V_S0 | TPAD34 | TP275 |
| <29,32> SATA_TXP0 | TPAD34 | TP260 |
| <29,32> SATA_TXN0 | TPAD34 | TP266 |
| <29,32> SATA_RXN0 | TPAD34 | TP122 |
| <29,32> SATA_RXP0 | TPAD34 | TP137 |
| | TPAD34 | TP272 |

## Near ODD1

| | | |
|---|---|---|
| 5V_S0 | TPAD34 | TP132 |
| <29,32> SATA_TXP1 | TPAD34 | TP251 |
| <29,32> SATA_TXN1 | TPAD34 | TP249 |
| <29,32> SATA_RXN1 | TPAD34 | TP136 |
| <29,32> SATA_RXP1 | TPAD34 | TP135 |
| | TPAD34 | TP134 |

## Near HDMI1

| | | |
|---|---|---|
| 5V_HDMI_S0 | TPAD34 | TP138 |
| <26> HDMI_TXD0 | TPAD34 | TP139 |
| <26> HDMI_TXD#0 | TPAD34 | TP140 |
| <26> HDMI_TXD1 | TPAD34 | TP164 |
| <26> HDMI_TXD#1 | TPAD34 | TP165 |
| <26> HDMI_TXD2 | TPAD34 | TP193 |
| <26> HDMI_TXD#2 | TPAD34 | TP195 |
| <26> HDMI_TXC | TPAD34 | TP197 |
| <26> HDMI_TX#C | TPAD34 | TP117 |
| <26> HDMI_SCLK_C | TPAD34 | TP198 |
| <26> HDMI_SDATA_C | TPAD34 | TP200 |
| <22,26> ATI_HDMI_HPD | TPAD34 | TP201 |
| | TPAD34 | TP202 |

## Near CN1

| | | |
|---|---|---|
| FAN1_VCC | TPAD34 | TP16 |
| 5V_S0 | TPAD34 | TP23 |
| <7> FAN1_FG1 | TPAD34 | TP18 |
| | TPAD34 | TP15 |

## Near CN9 NewCard

| | | |
|---|---|---|
| <27,42> PCIE_TXP3 | TPAD34 | TP166 |
| <27,42> PCIE_TXN3 | TPAD34 | TP168 |
| <27,42> PCIE_RXP3 | TPAD34 | TP207 |
| <27,42> PCIE_RXN3 | TPAD34 | TP208 |
| <3,42> CLK_PCIE_NEW | TPAD34 | TP170 |
| <3,42> -CLK_PCIE_NEW | TPAD34 | TP172 |
| <42> -CPPE | TPAD34 | TP276 |
| <3,42> -NEWCARD_CLKREQ | TPAD34 | TP174 |
| 3D3V_NEW_S0 | TPAD34 | TP186 |
| <42> -PERST | TPAD34 | TP187 |
| 3D3V_NEW_LAN_S5 | TPAD34 | TP213 |
| 1D5V_NEW_S0 | TPAD34 | TP301 |
| <28,31,36,41,42> SMB_DATA | TPAD34 | TP191 |
| <28,31,36,41,42> SMB_CLK | TPAD34 | TP300 |
| <42> -CPUSB | TPAD34 | TP214 |
| <27,42> USB_PP9_NEWCARD | TPAD34 | TP304 |
| <27,42> USB_PN9_NEWCARD | TPAD34 | TP308 |
| | TPAD34 | TP169 |

BOM1

緯創資通 **Wistron Corporation**
21F, 88, Sec.1, Hsin Tai Wu Rd., Hsichih,
Taipei Hsien 221, Taiwan, R.O.C.

| | | |
|---|---|---|
| Title | TTEST_PAD | |
| Size C | Document Number LT32M | Rev -1 |
| Date: Tuesday, May 13, 2008 | Sheet 55 of 55 | |